BLMPS MON12 25/5C4

Technical Manual
Power supply

Version 00

BRUKER

The information in this manual may be altered without notice.

BRUKER accepts no responsibility for actions taken as a result of use of this manual. BRUKER accepts no liability for any mistakes contained in the manual, leading to coincidental damage, whether during installation or operation of the instrument. Unauthorised reproduction of manual contents, without written permission from the publishers, or translation into another language, either in full or in part, is forbidden.

This manual describes the units as they are at the time of printing. On request, the manufacturer shall supply circuit diagrams, lists of components, descriptions, calibrating instructions and any other information for use by qualified personnel of the user, in charge of repairing the parts of the unit which have been stated by the manufacturer to be "repairable". Such supply shall in no event constitute permission to modify or repair the units or approval of the same.

All rights reserved for the units, circuits, processes and appellations mentioned herein.

This unit is not designed for any type of use which is not specifically described in this manual. Such use may be hazardous.

This manual was written by

FRISON SERGE

Wissembourg, France

Unit P/N W1211976

Manual P/N : W1211984

Contents

Contents 5

Index 7

1 Generalities 9

1.1 Power supply identification 9
1.2 Output specifications 9
1.3 Input specifications 10
1.4 Stability ΔI/I at I Max 11
1.5 Installation 12
1.6 Service information and maintenance 13
1.7 Technical contact 14

2 Wiring diagrams 15

2.1 BPS Local control unit BMC20-6 Blind 16
2.2 BPS Local control unit BMC20-6 2xRS232C+IEEE 17
2.3 BPS Local control unit BMC20-6 2xRS232C+IEEE 18
2.4 Power module Mon 2 1/2 19
2.5 Power module Mon 2 2/2 20

3 Local control unit electronic boards 21

3.1 Auxiliary power supply 22
3.2 Power supply controller unipolar 23
ADC 12 Bitt 24
DAC 16 Bit & Regulation 25
Output stage 26
PAL 27
P.S Controller Jumper & Layout 28
P.S Controller Board adress 29
3.3 Relay in/out 30
Relay 31
InputsI 32
PAL 22V10 33
Layout and jumper configuration 34
3.4 CPU & 2x RS232 35
2x RS232 interfacet 36
Jumper configuration 1x RS232C 37
PAL 22V10 38
PAL 16V8 39
PAL 22V10 40
PAL 22V10 41

4 REM.CONTROL UNIT ELCTR.BOARDS 43

4.1 Display BMC20 44
Alpha numeric display 45
Keyboard BMC20 46
4.2 Display PIO 47
Key and Led I/O 48
4.3 Parallel I/O 49
Layout 50

5 Cabinet electronic boards 51

5.1 UCM (universal control module)l 52
UCM 53
UCM 54
UCM 55
5.2 Mains control 56
5.3 Power stage 57

Index

Generalities 1

Power supply identification 1.1

UNIT/TYPE	BLMPS MON12 25/5C4	DATE	05/2002
SERIAL N°	W1211976	TESTED BY	L.MISSLIN
CUSTOMER	BATAVIA ILLINOIS	SIGNATURE	

Output specifications 1.2

CHANNEL	OUTPUT VOLTAGE	OUTPUT CURRENT	OUTPUT POWER	LOAD RESISTANCE
1	25V	5A	125W	5 ohm

Input specifications *1.3*

Power line

Type :

- Mono phase X
- Three phase
- With neutral
- Without neutral

Voltage.....120 V

Current .....5 A

Nomimal power ..... 0.6 KVA

Auxiliary line

Voltage.....120V

Current 1.2A

Cooling mode

- Air X
- Water

Max input pressure .....10 Bars

Water circuit tested at 16 Bars/1H

Minimum flow rate..... 6 l/mn

Requested delta pressure in/out.....3.5 Bars

Max water input temperature .....30°C

Ambiant air

Max temperature .....30°C

Stability ∆I/I at I Max *1.4*

StabilityDI/I at I max .....

Warmup time = 30mn

DC to 10Hz..... per mn .....2.10^{-4}

DC to 10Hz..... per 8 hours .....1.10^{-3}

Temperature coef

Shunt.....+/-25 ppm/°C

Regulation ..... 25 ppm/°C

Cabinet

- Dimensions Height .....132.5 mm
- Lenght.....483 mm
- Depth .....464 mm
- Weight ..... 35 kg

Installation *1.5*

A minimum distance of 20 cm must be respected between the cabinet and the wall. The top and the bottom of the cabinet must be kept free for an optimal air flow.

Connect the water cooling tubes respecting the indications written on the label.

IN : cold water input

OUT : water ouput

Connect the line input cables and the PE (protective earth) to the input terminals.

Adapt the cable section to the power consuption which is indicated on chapter «specifications».

Connect the load to the «DC out» terminals. Adapt the cable section to the driven load current.

Connect all other cables (interface, control...).

Connect the magnet interlock (external security)

The terminals must be short circuited for normal running.

The supply will stop by opening the loop.

Don’t apply any voltage on these terminals.

Service information and maintenance *1.6*

Don’t never disconnect any cables during running of the supply. Risk of electrical arcs and shocks.

Don’t never splash or pour any liquid on the cabinet. Use alcohol and a rag for cleaning.

The producced magnetic field can affect pace maker. Concerned people should not come close to the equipment.

Be careful for service requiring line supply. Voltage is present on any printed circuit boards and components.

In some conditions, voltage can be induced between analog ground and protective earth on power supplies with floating analog ground or equiped with a fuse ground fault detector.

MAINTENANCE :

Caution : Risk of electrocution.

Disconnect the mains before any operation.

For an optimal running, check every 6 months following points.

State and tightness of all water tubes and connections.

«Water flow» fault indication of the flow meter.

State of the transistor fuses. Blow fuses must be replaced and the corresponding transistor too. (in power supplies equipped with power stages).

Tighness of all screws on power connections.

State and elasticity of the carbon roller srings. (in power supplies equipped with a variable transformer.

Damaged rollers must be replaced.

Remove dust and dirt from the components fans and air filters.

If the power supply must be moved, it is necessary to drain the water circuit.

Technical contact *1.7*

BRUKER BIOSPIN
Power Electronik Department
34, Rue de l'industrie
67166 WISSEMBOURG CEDEX (FRANCE)
TEL : +33 (0)3 88 73 69 42
FAX : +33 (0)3 88 73 68 86
E-MAIL : power-elec.support@bruker.fr

Wiring diagrams 2

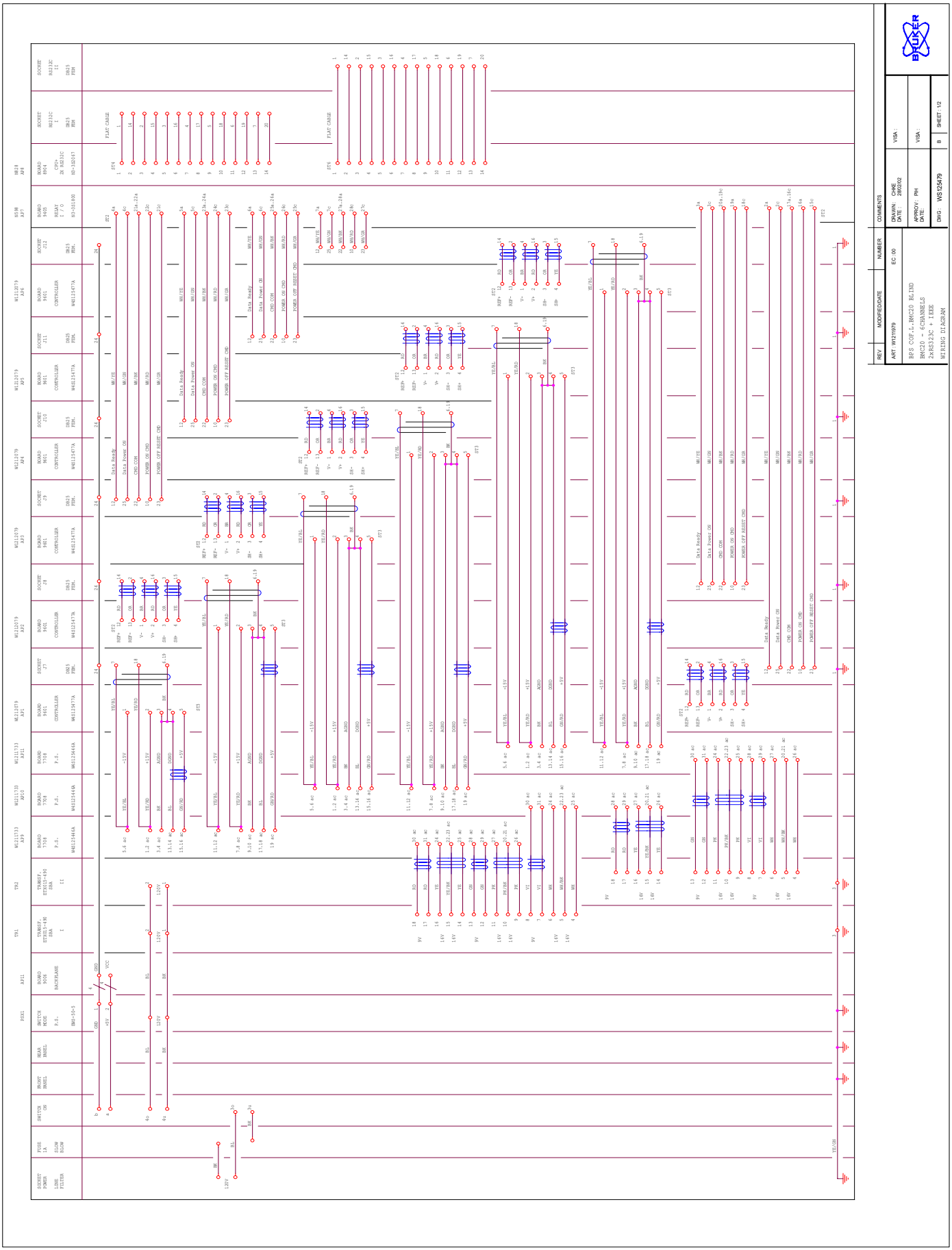
REV
MODIFIED/DATE
NUMBER
COMMENTS
ART: W1211979
EC 00
DRAWN: CHRE
DATE: 28/02/02
VISA:
BPS COF.L.BMC20 BLIND
BMC20 - 6CHANNELS
2xRS232C + IEEE
WIRING DIAGRAM
APPROV: PH
DATE:
VISA:
DWG: WS12S479
B
SHEET 1/2
BRUKER

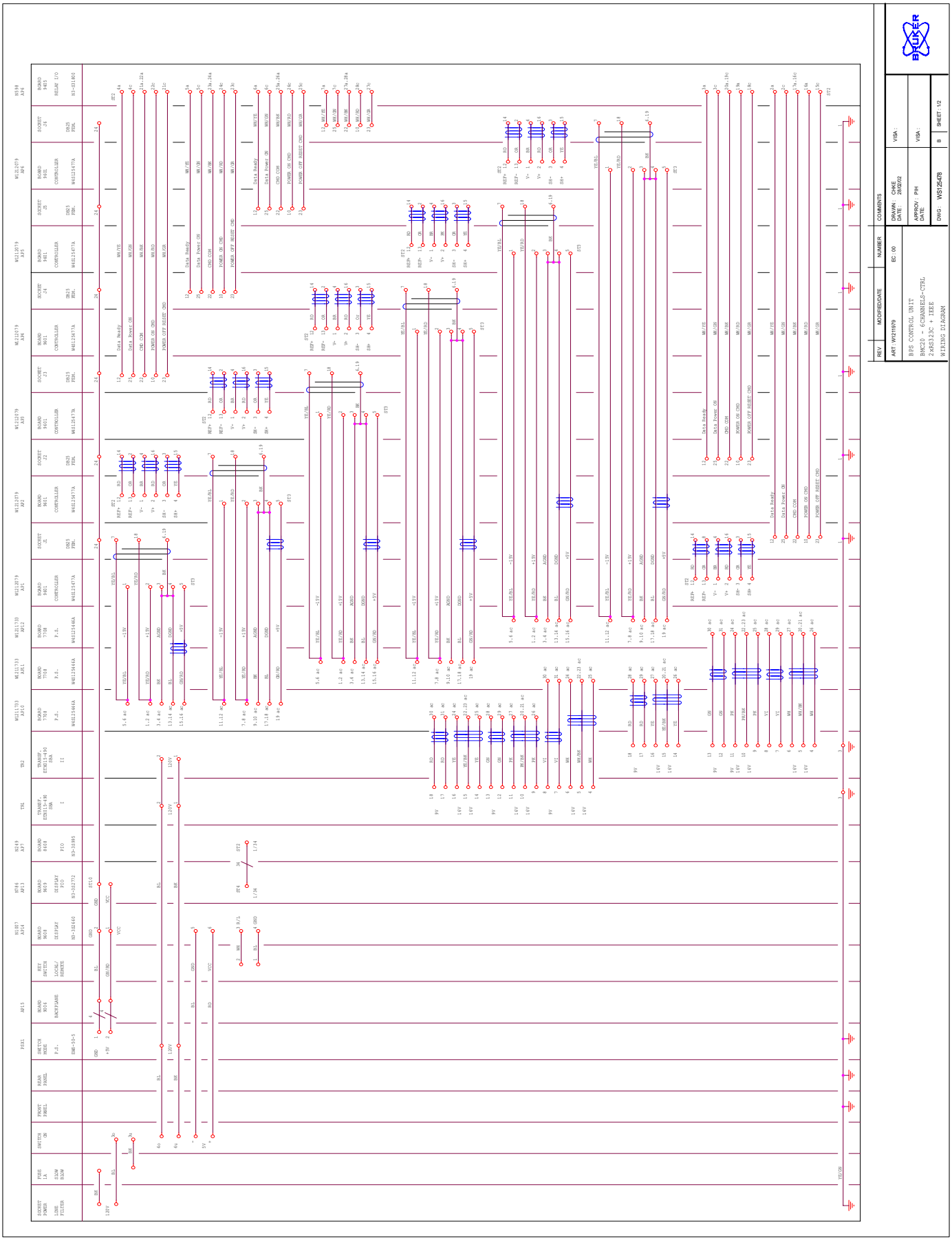
REV
MODIFIED/DATE
NUMBER
COMMENTS
ART: W121979
EC 00
DRAWN: CHKE
DATE: 28/02/02
VISA:
APPROV: PH
DATE:
VISA:
BPS CONTROL UNIT
BMC20 - 6CHANNELS-CTRL
2xRS232C + IEEE
WIRING DIAGRAM
DWG: WS125478
B
SHEET 1/2

BPS Local control unit BMC20-6 2xRS232C+IEEE *2.3*

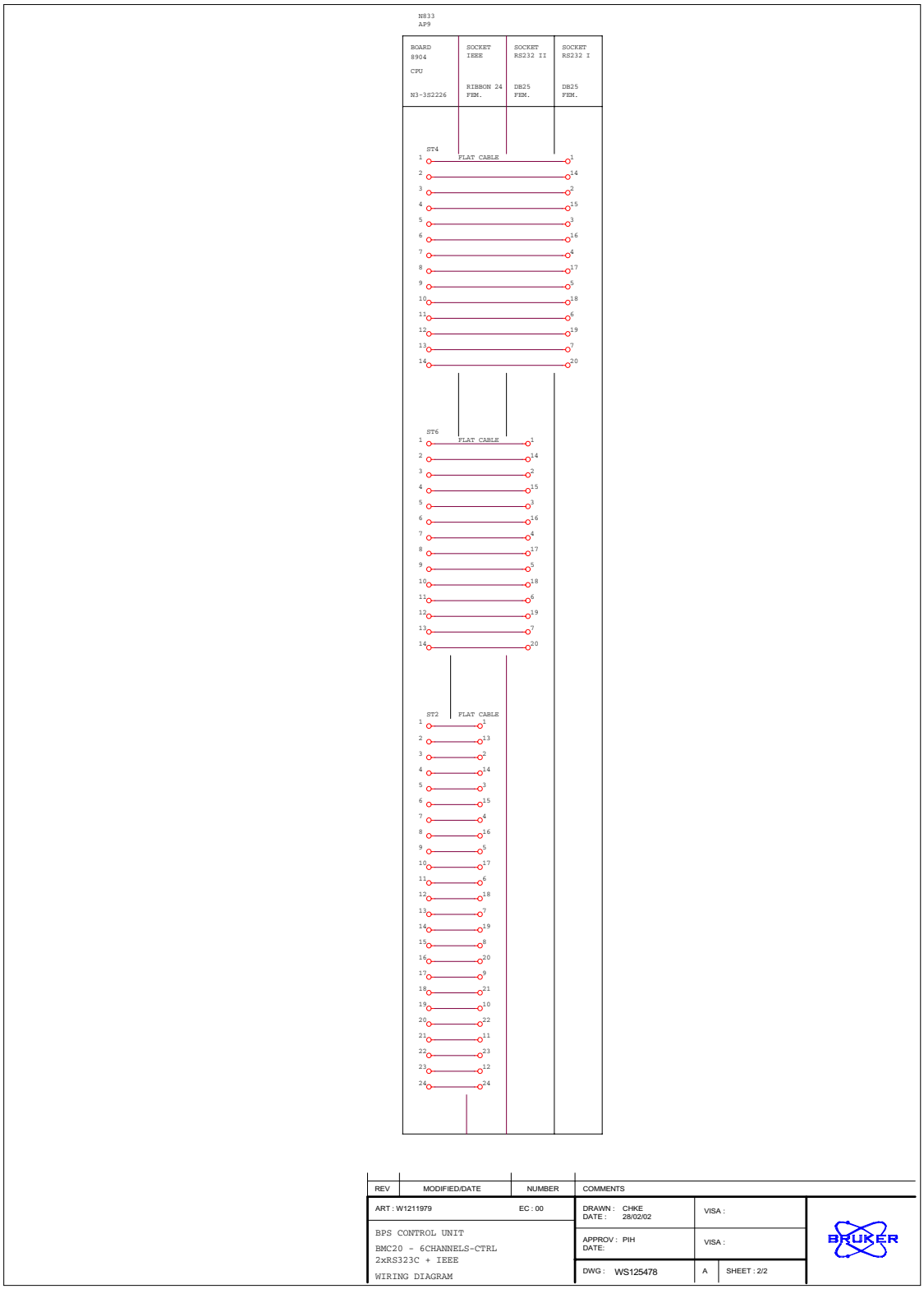

Power module Mon 2 1/2 *2.4*

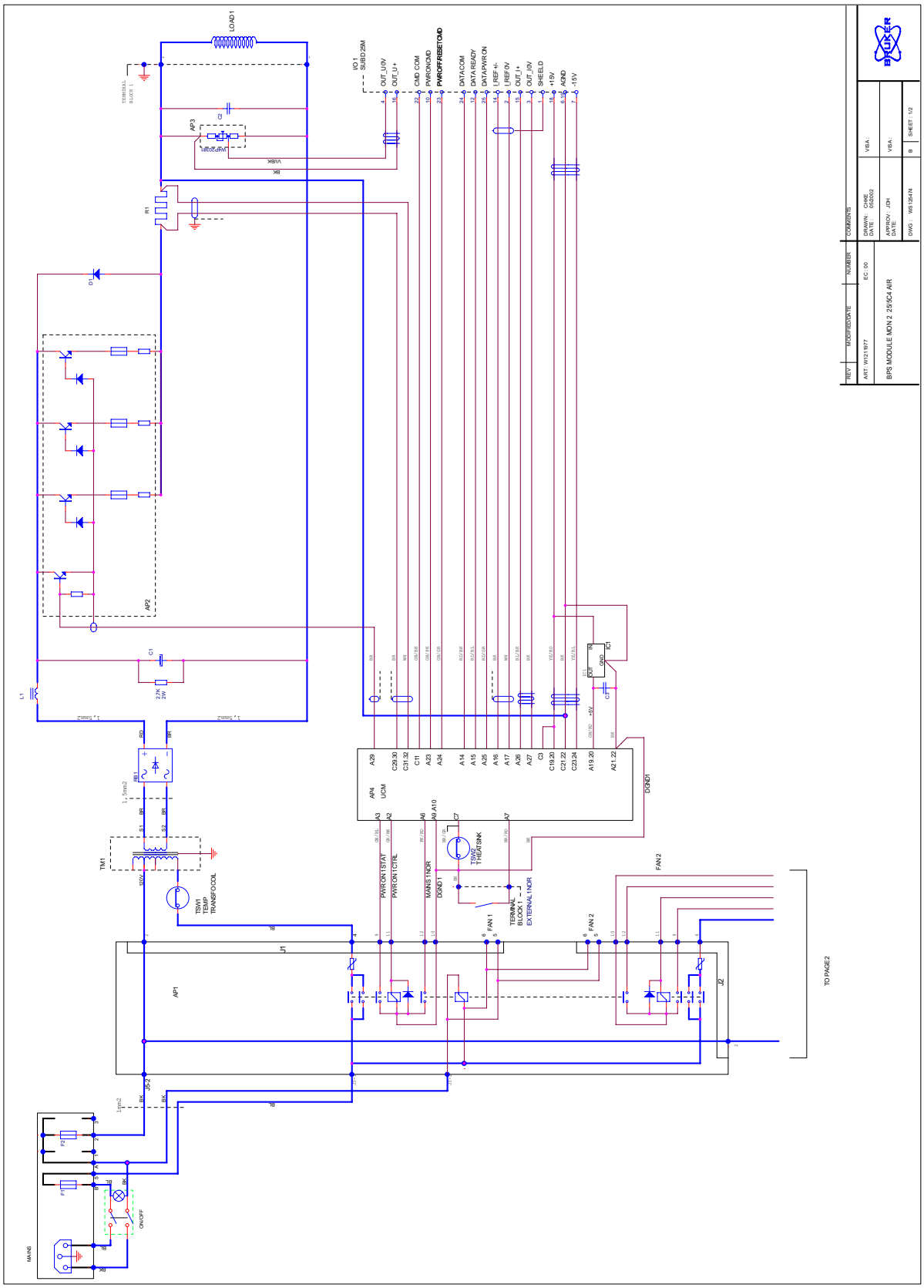

Power module Mon 2 2/2 *2.5*

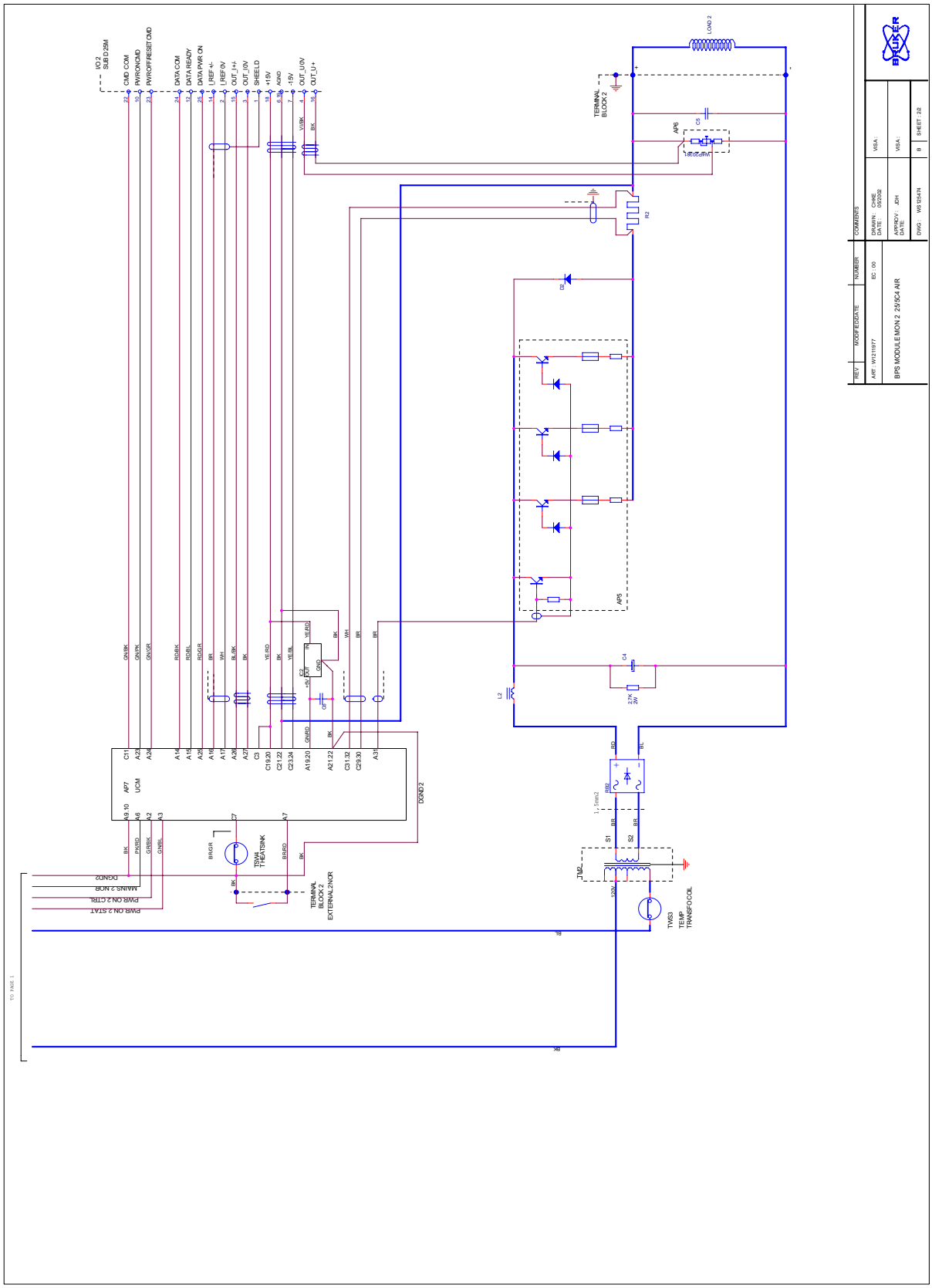

Local control unit electronic boards

3

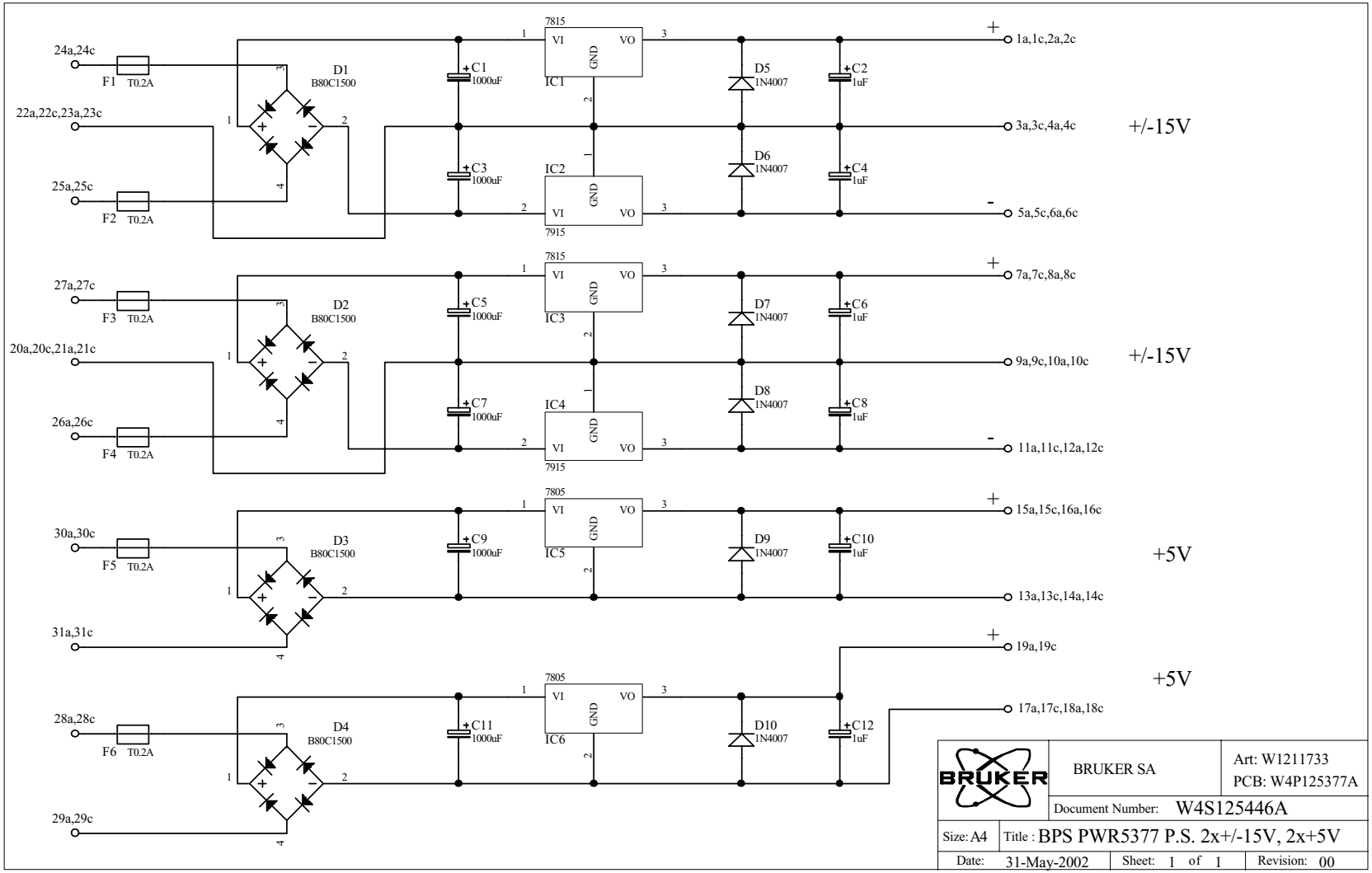
24a,24c
F1 T0.2A
22a,22c,23a,23c
25a,25c
F2 T0.2A
D1
B80C1500
C1
1000uF
C3
1000uF
7815
IC1
IC2
7915
D5
1N4007
D6
1N4007
C2
1uF
C4
1uF
1a,1c,2a,2c
3a,3c,4a,4c
5a,5c,6a,6c
+/-15V
27a,27c
F3 T0.2A
20a,20c,21a,21c
26a,26c
F4 T0.2A
D2
B80C1500
C5
1000uF
C7
1000uF
IC3
IC4
D7
1N4007
D8
1N4007
C6
1uF
C8
1uF
7a,7c,8a,8c
9a,9c,10a,10c
11a,11c,12a,12c
+/-15V
30a,30c
F5 T0.2A
31a,31c
D3
B80C1500
C9
1000uF
7805
IC5
D9
1N4007
C10
1uF
15a,15c,16a,16c
13a,13c,14a,14c
+5V
28a,28c
F6 T0.2A
29a,29c
D4
B80C1500
C11
1000uF
IC6
D10
1N4007
C12
1uF
19a,19c
17a,17c,18a,18c
+5V
BRUKER
BRUKER SA
Art: W1211733
PCB: W4P125377A
Document Number: W4S125446A
Size: A4
Title : BPS PWR5377 P.S. 2x+/-15V, 2x+5V
Date: 31-May-2002
Sheet: 1 of 1
Revision: 00

Power supply controller unipolar *3.2*

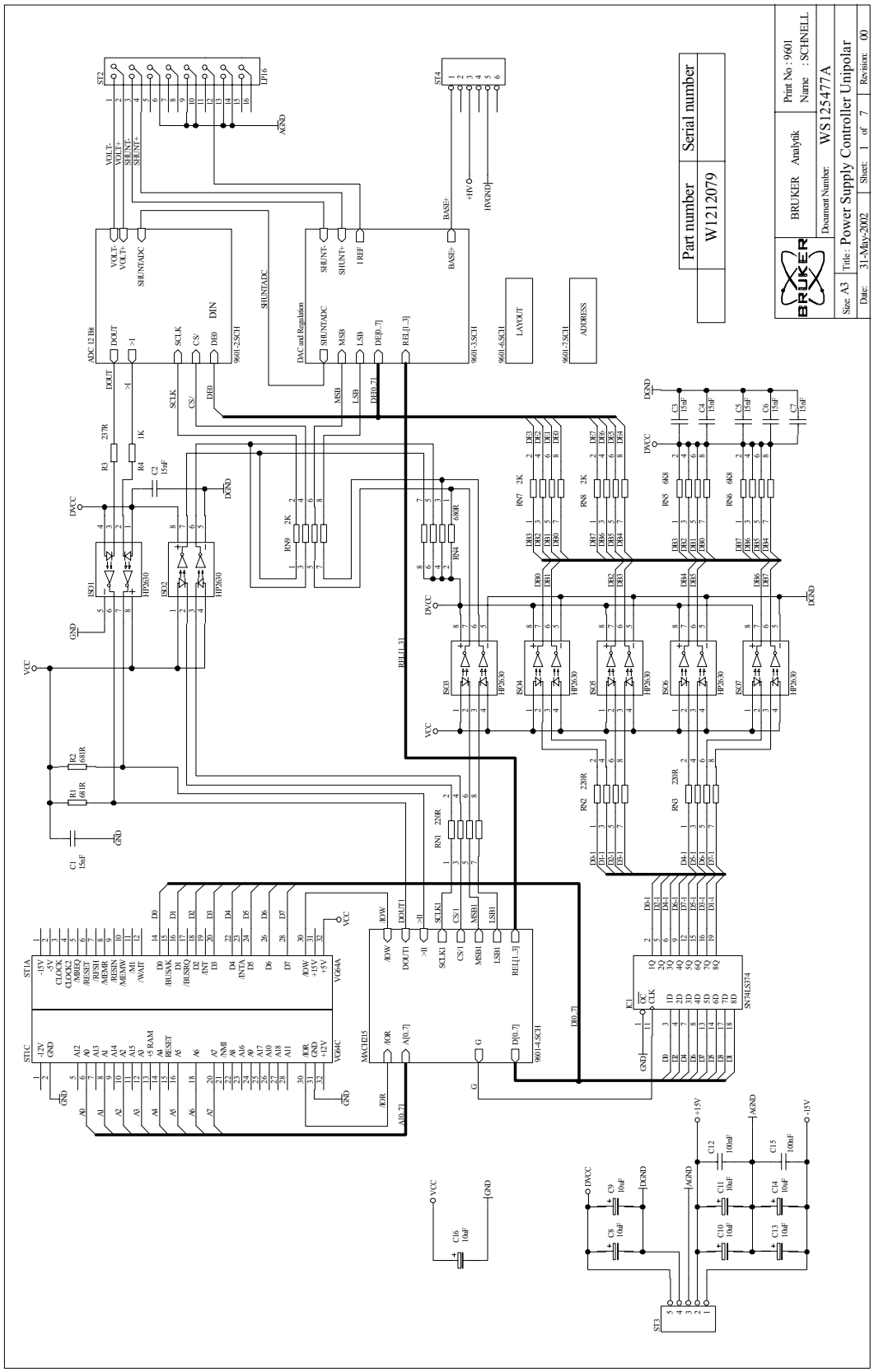

ADC 12 Bitt *3.2.1*

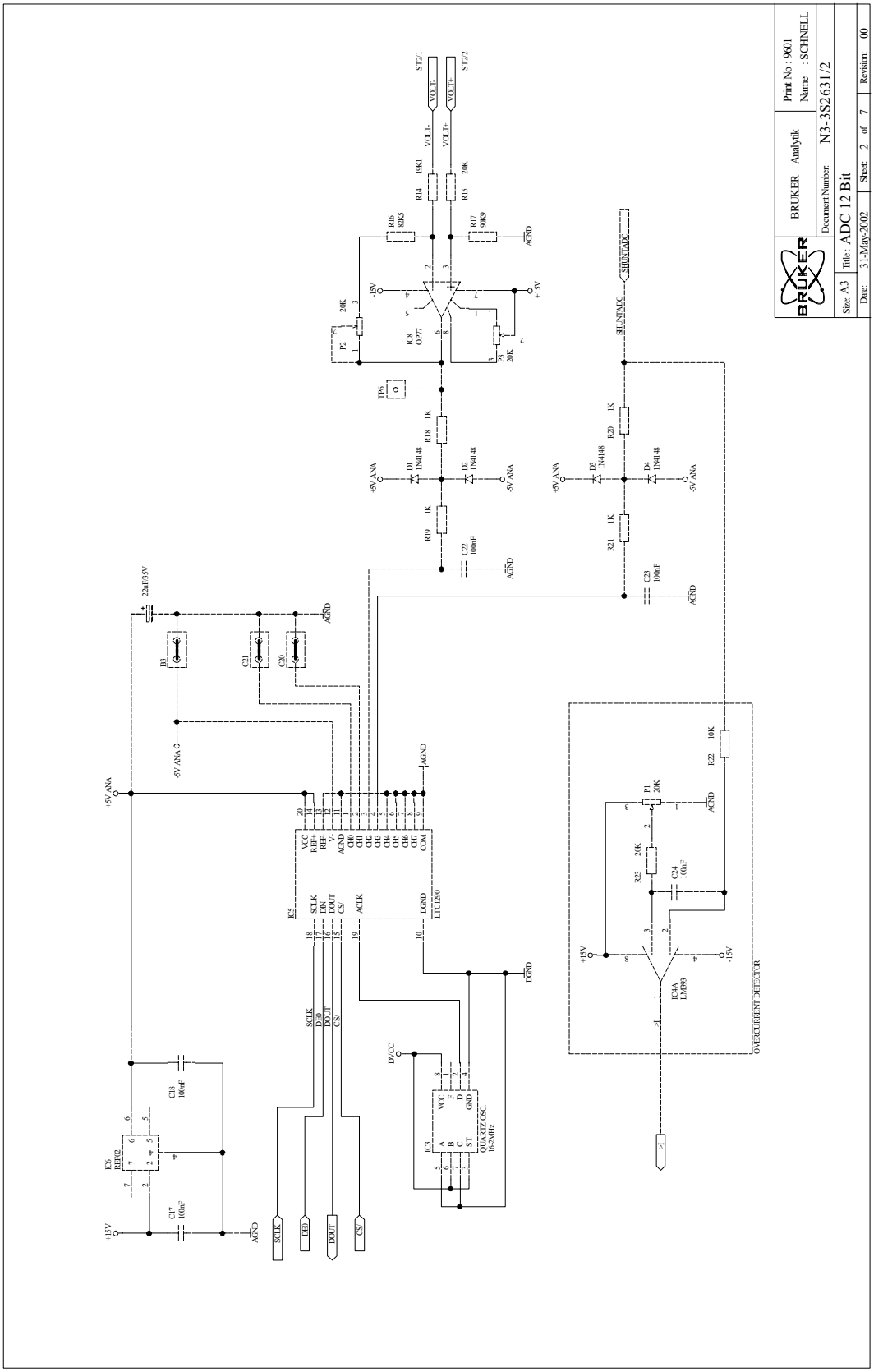

DAC 16 Bit & Regulation *3.2.2*

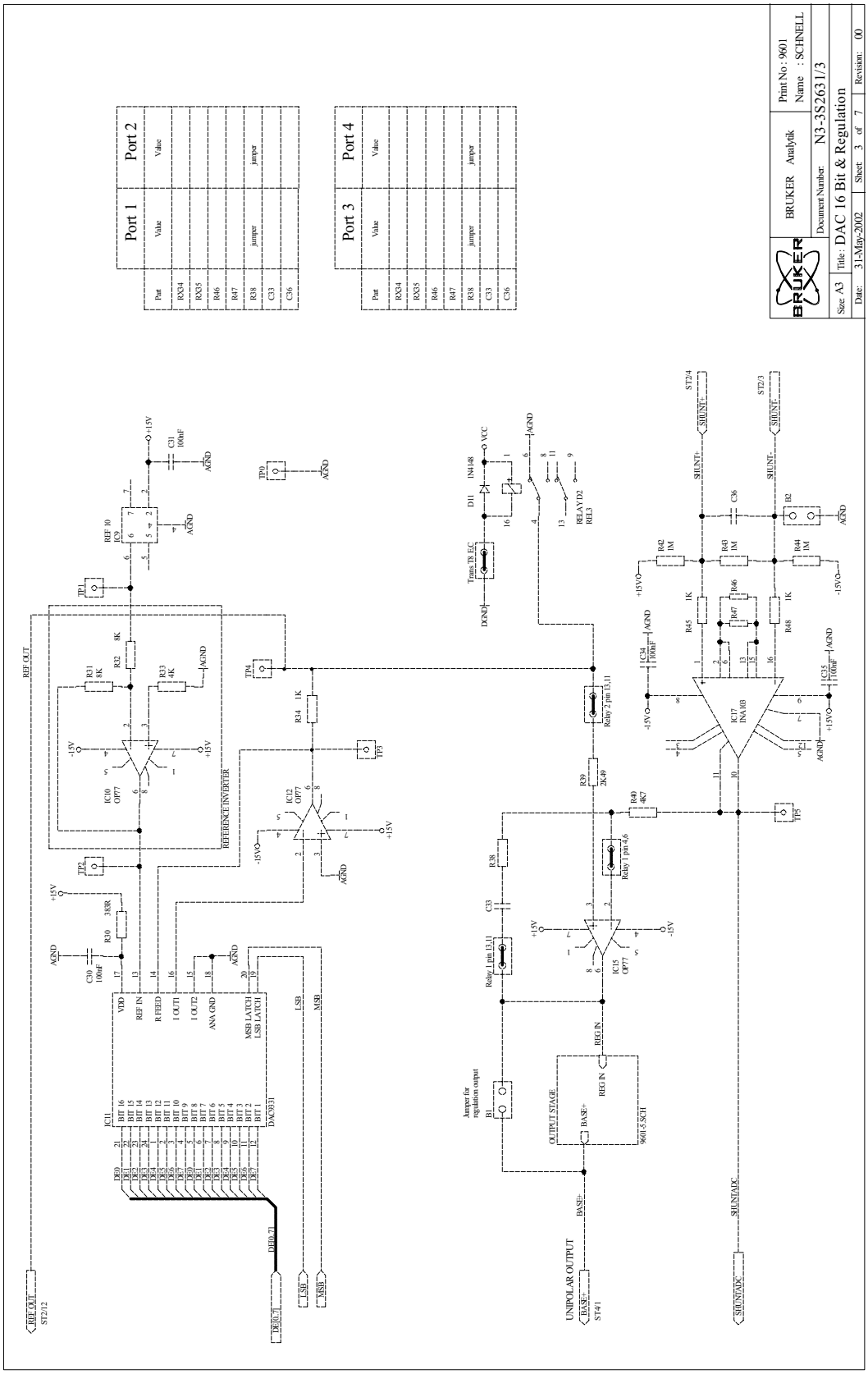

Output stage *3.2.3*

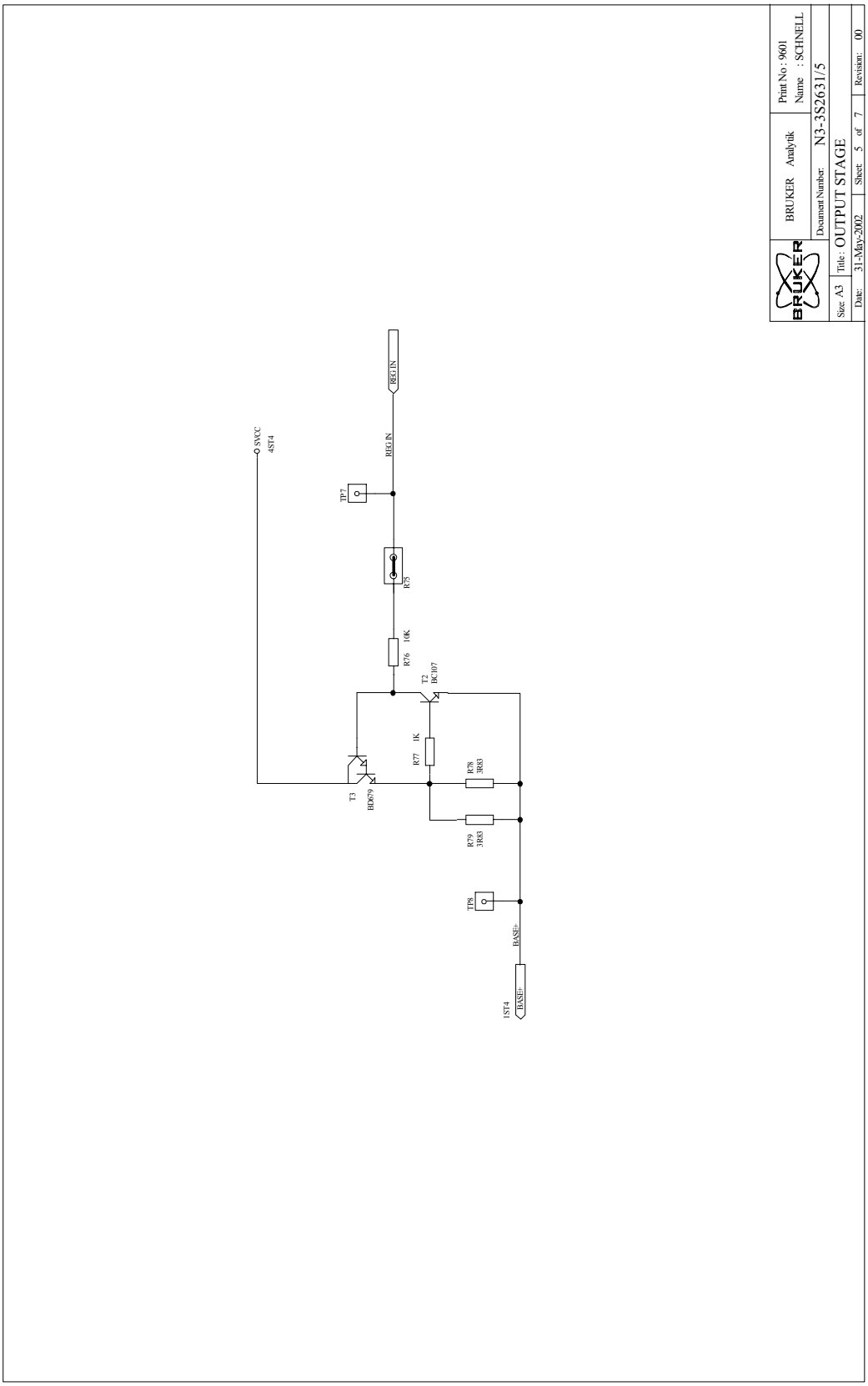

PAL ***3.2.4***

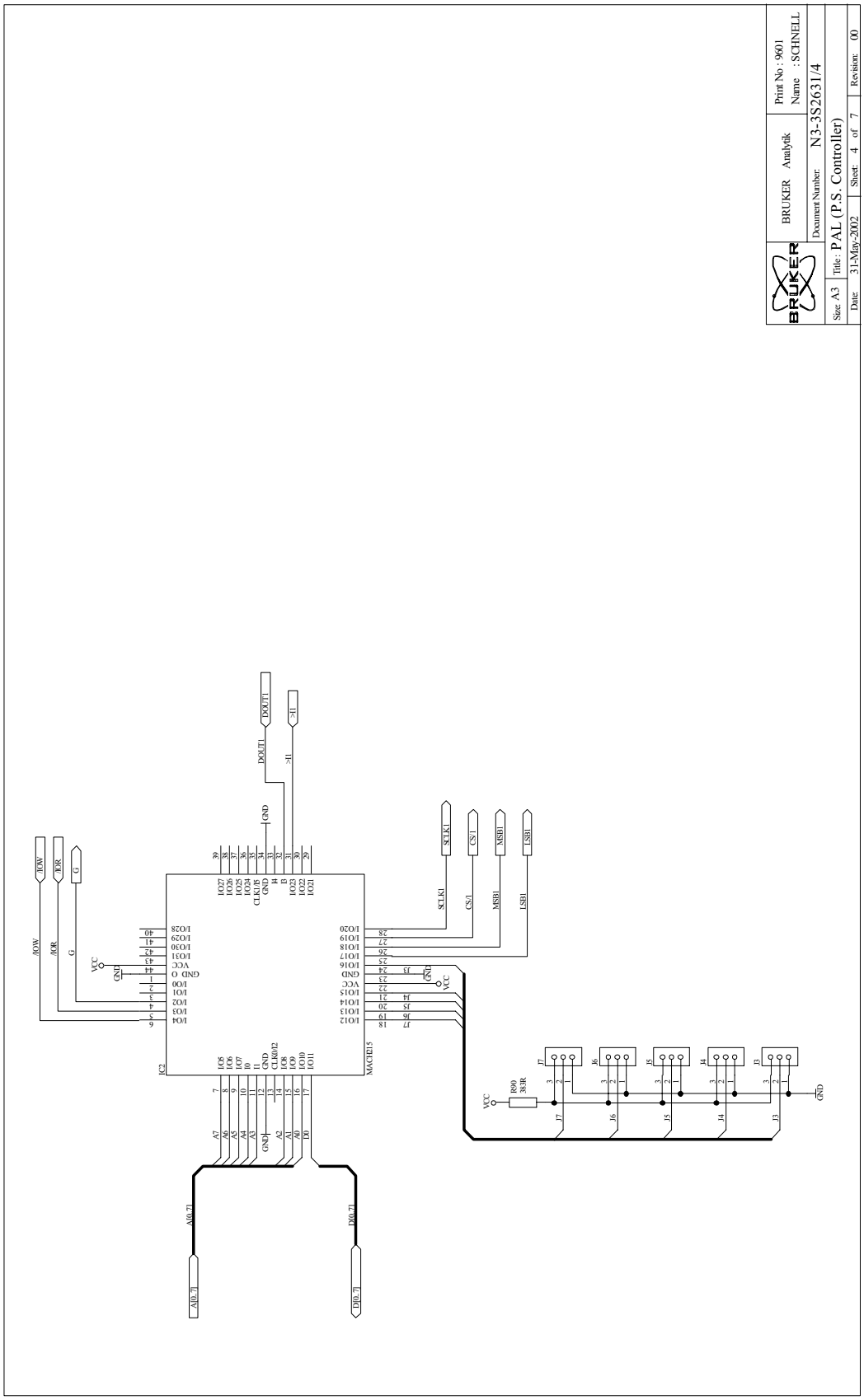
BRUKER Analytik
Print No : 9601
Name : SCHNELL
Document Number: N3-3S2631/4
Size: A3
Title: PAL (P.S. Controller)
Date: 31-May-2002
Sheet: 4 of 7
Revision: 00

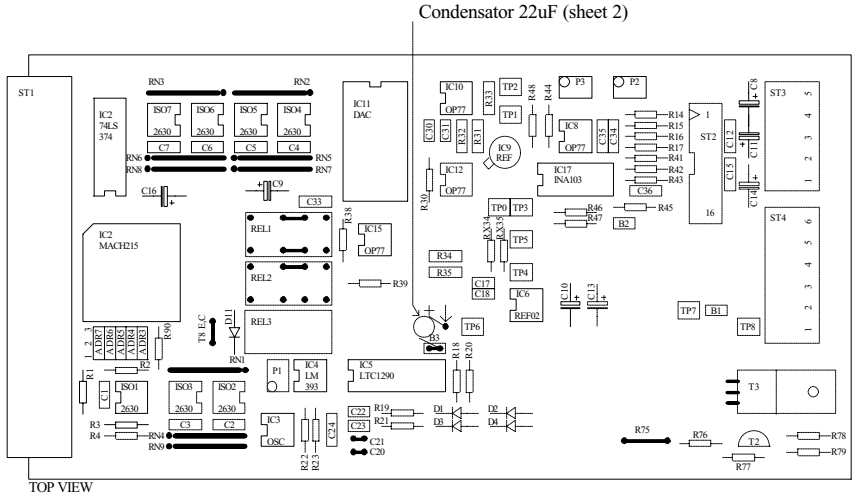

Diese Zeichnung bedeutet dass eine Drahtbrücke eingelötet wird

RX34, RX35, R38, R47, R78, R79, C33
werden auf Stützstifte gelötet.

BRUKER	BRUKER Analytik	Print No : 9601 Name : SCHNELL
	Document Number: N3-3S2631/6	
Size: A3	Title : P.S. controller Jumper & Layout	
Date: 31-May-2002	Sheet: 6 of 7	Revision: 00

P.S Controller Board adress *3.2.6*

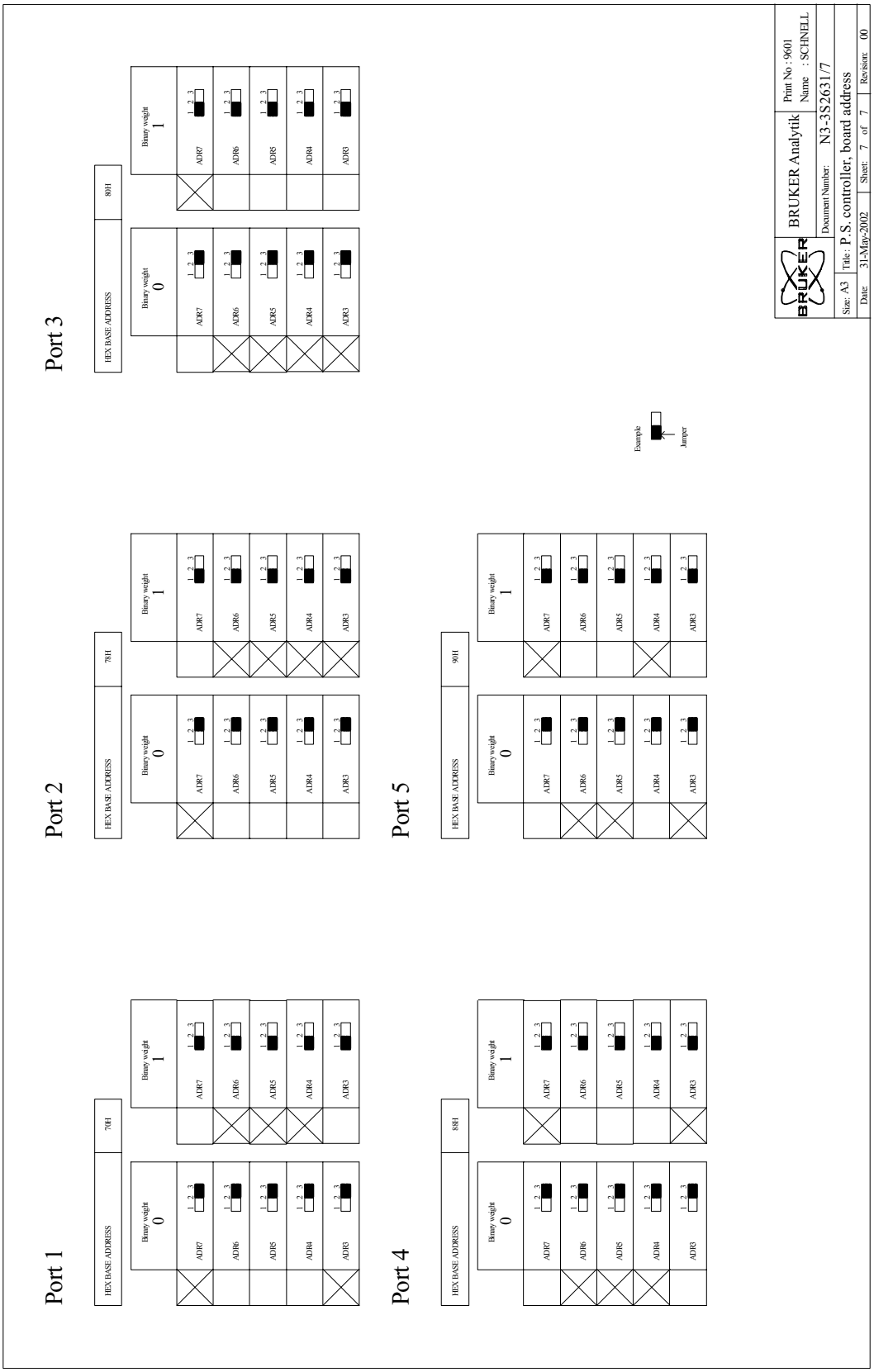

Relay in/out *3.3*

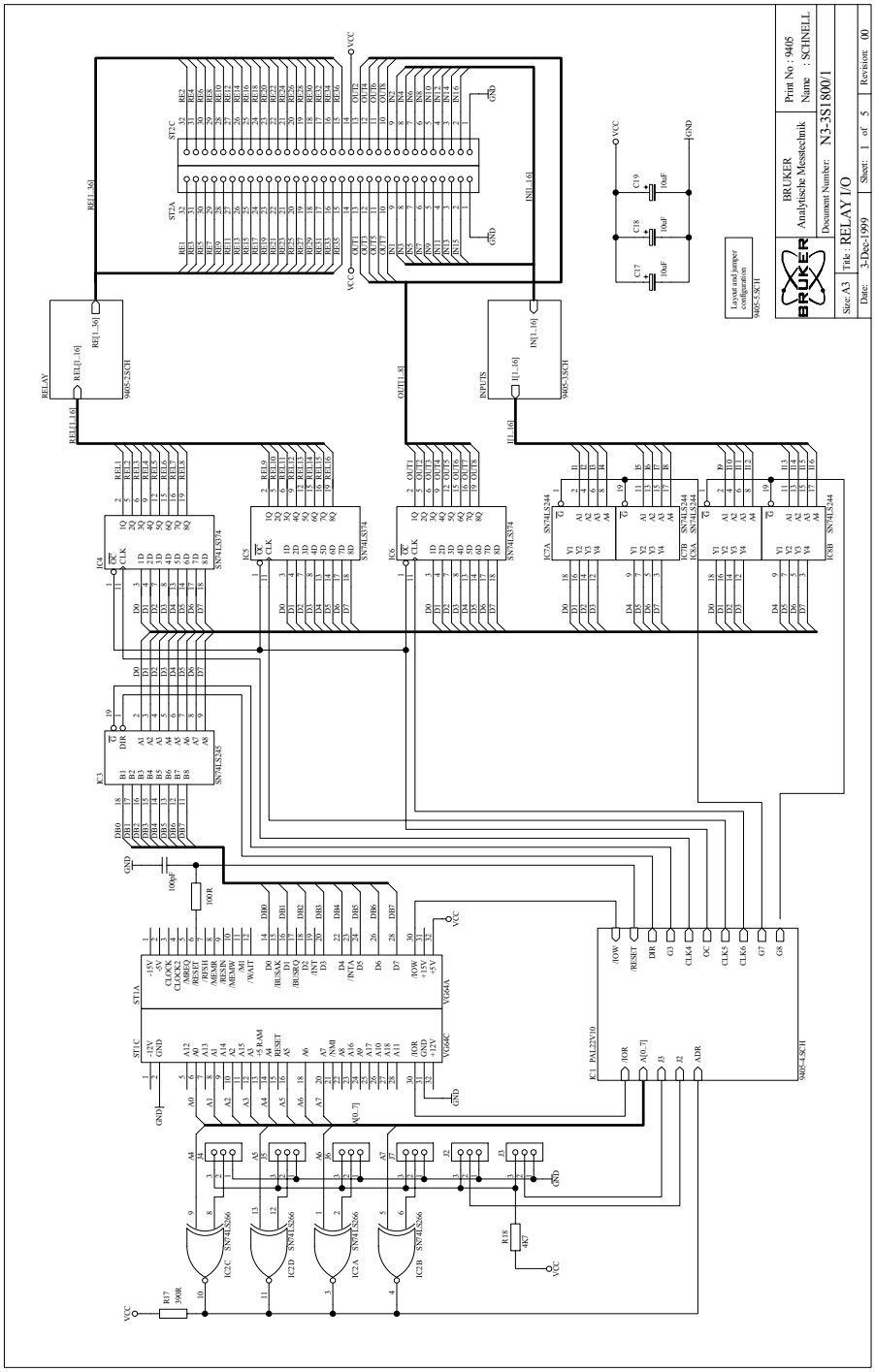

Relay *3.3.1*

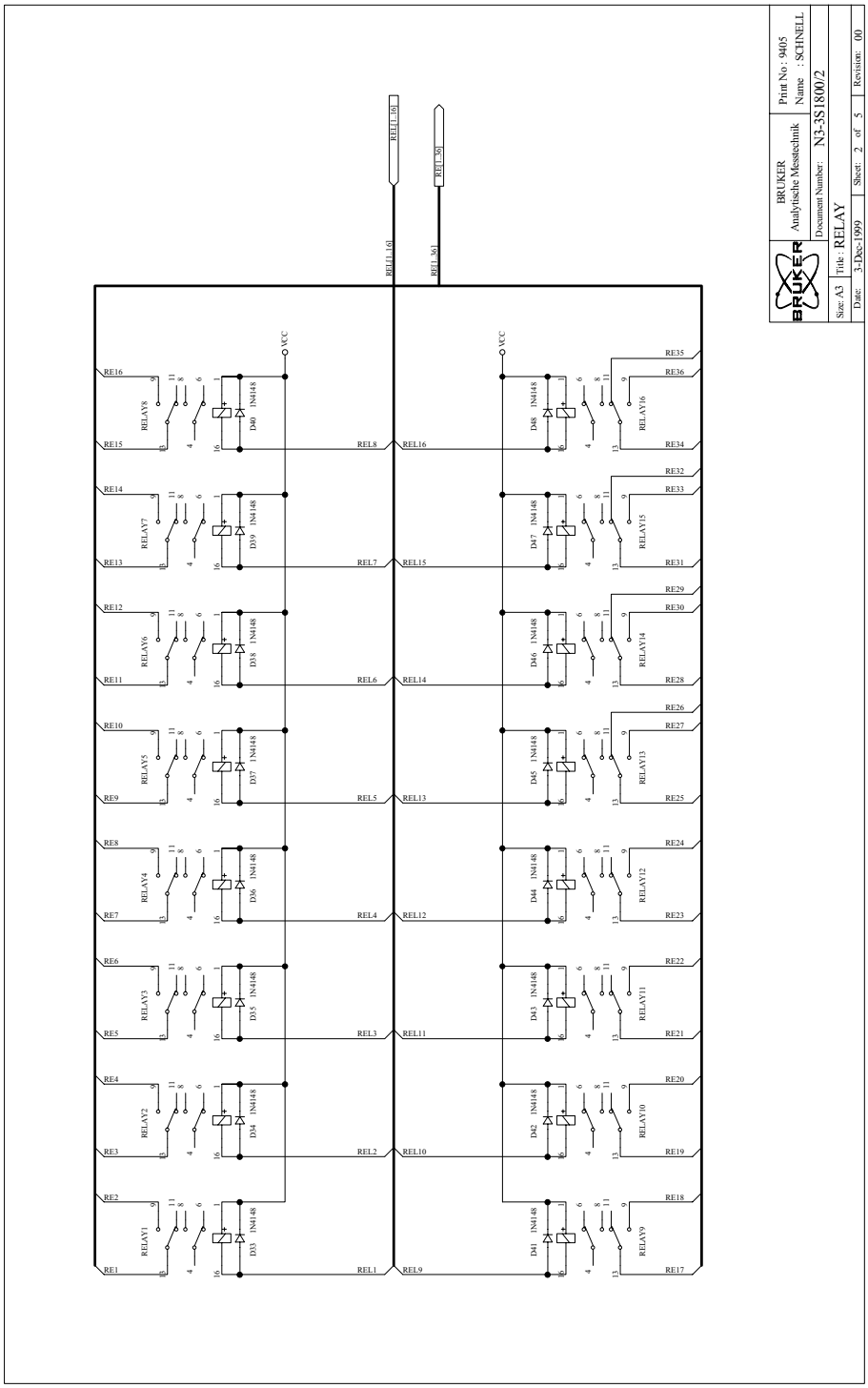
BRUKER
Analytische Messtechnik
Print No : 9405
Name : SCHNELL
Document Number: N3-3S1800/2
Size: A3
Title : RELAY
Date: 3-Dec-1999
Sheet: 2 of 5
Revision: 00
REL1..16
REL1..36
VCC
RELAY1
RELAY2
RELAY3
RELAY4
RELAY5
RELAY6
RELAY7
RELAY8
RELAY9
RELAY10
RELAY11
RELAY12
RELAY13
RELAY14
RELAY15
RELAY16
1N4148
RE1
RE2
RE3
RE4
RE5
RE6
RE7
RE8
RE9
RE10
RE11
RE12
RE13
RE14
RE15
RE16
RE17
RE18
RE19
RE20
RE21
RE22
RE23
RE24
RE25
RE26
RE27
RE28
RE29
RE30
RE31
RE32
RE33
RE34
RE35
RE36
REL1
REL2
REL3
REL4
REL5
REL6
REL7
REL8
REL9
REL10
REL11
REL12
REL13
REL14
REL15
REL16

InputsI ***3.3.2***

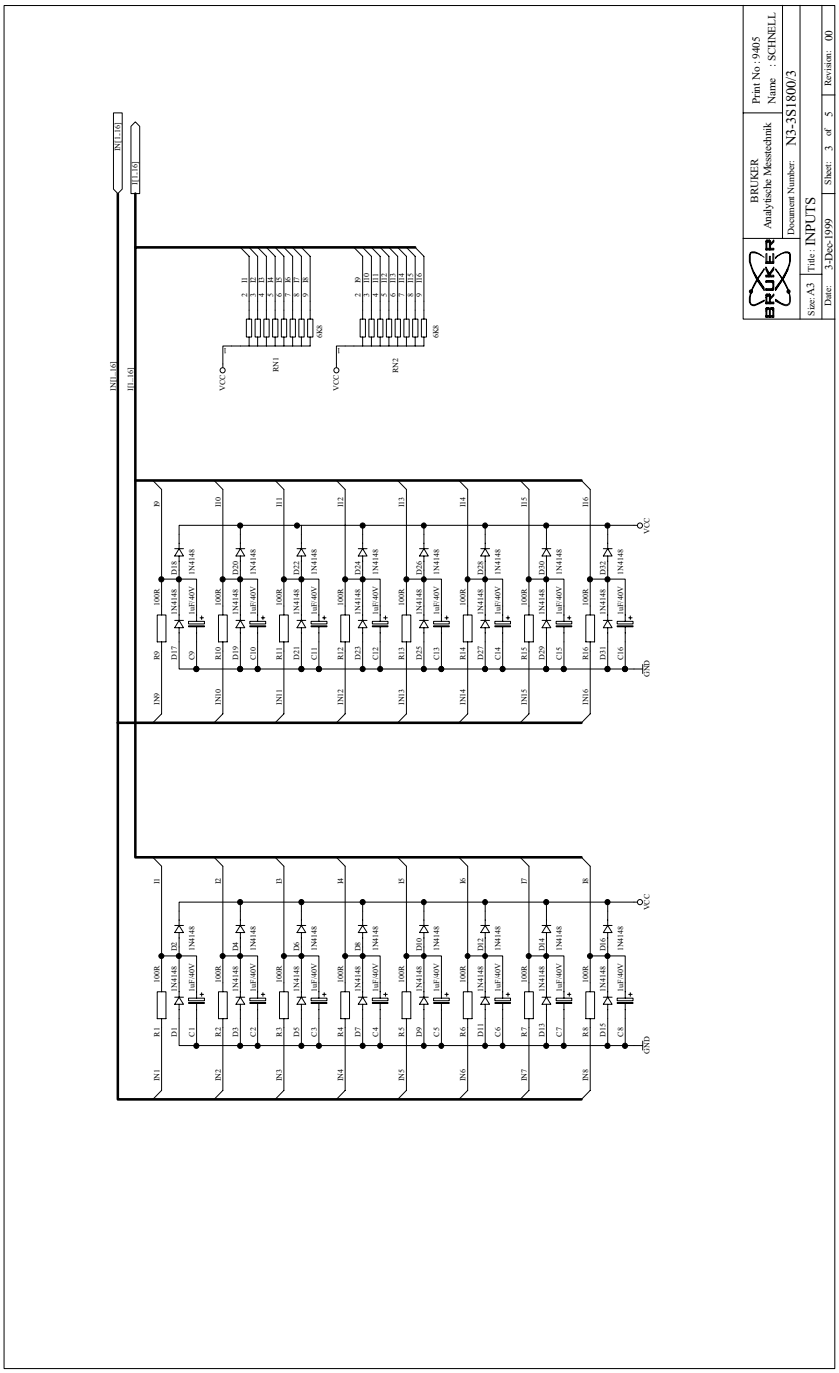
BRUKER
Analytische Messtechnik
Print No : 9405
Name : SCHNELL
Document Number: N3-3S1800/3
Size: A3
Title : INPUTS
Date: 3-Dec-1999
Sheet: 3 of 5
Revision: 00

PAL 22V10 *3.3.3*

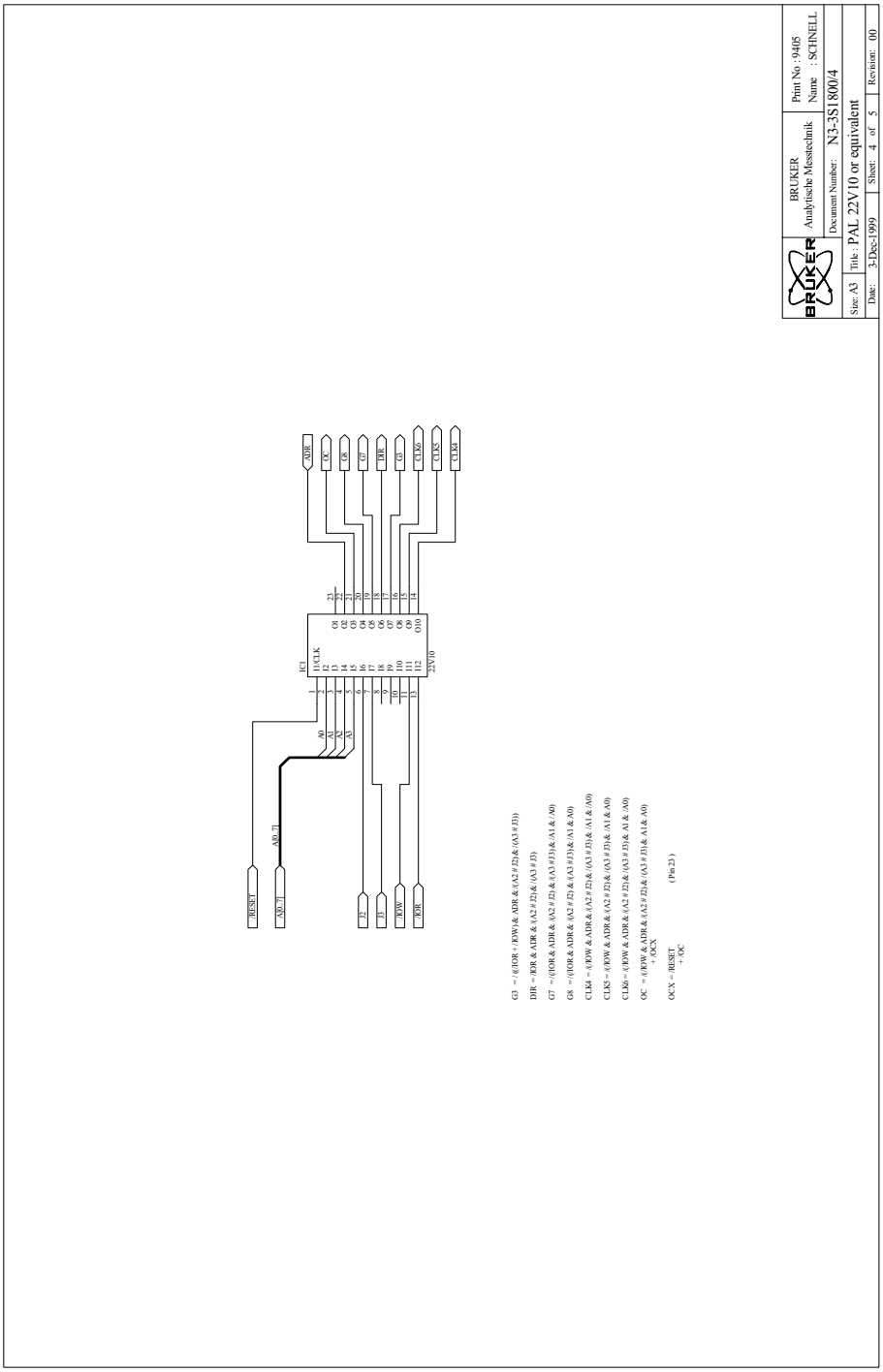

Layout and jumper configuration *3.3.4*

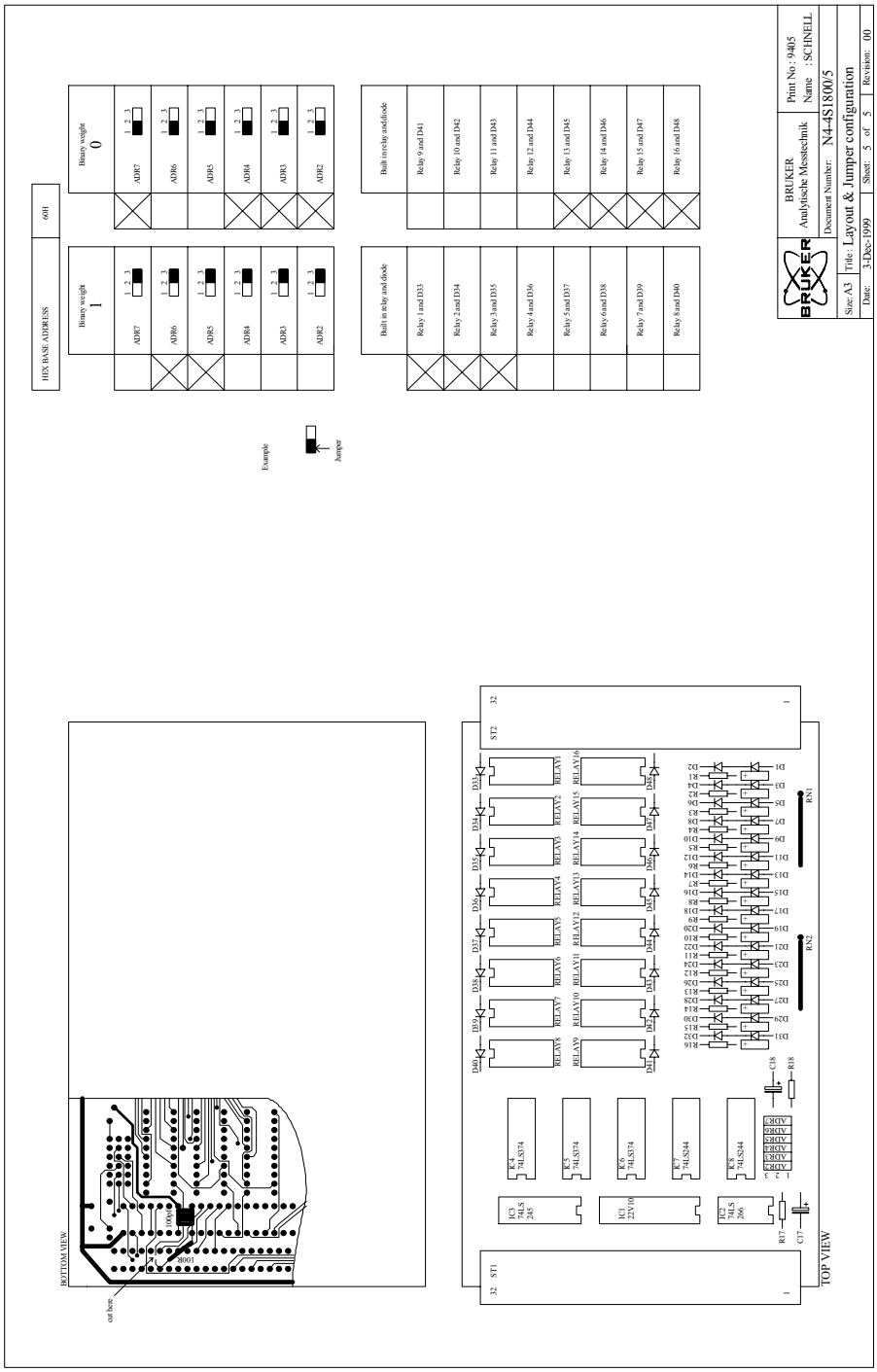

CPU & 2x RS232 *3.4*

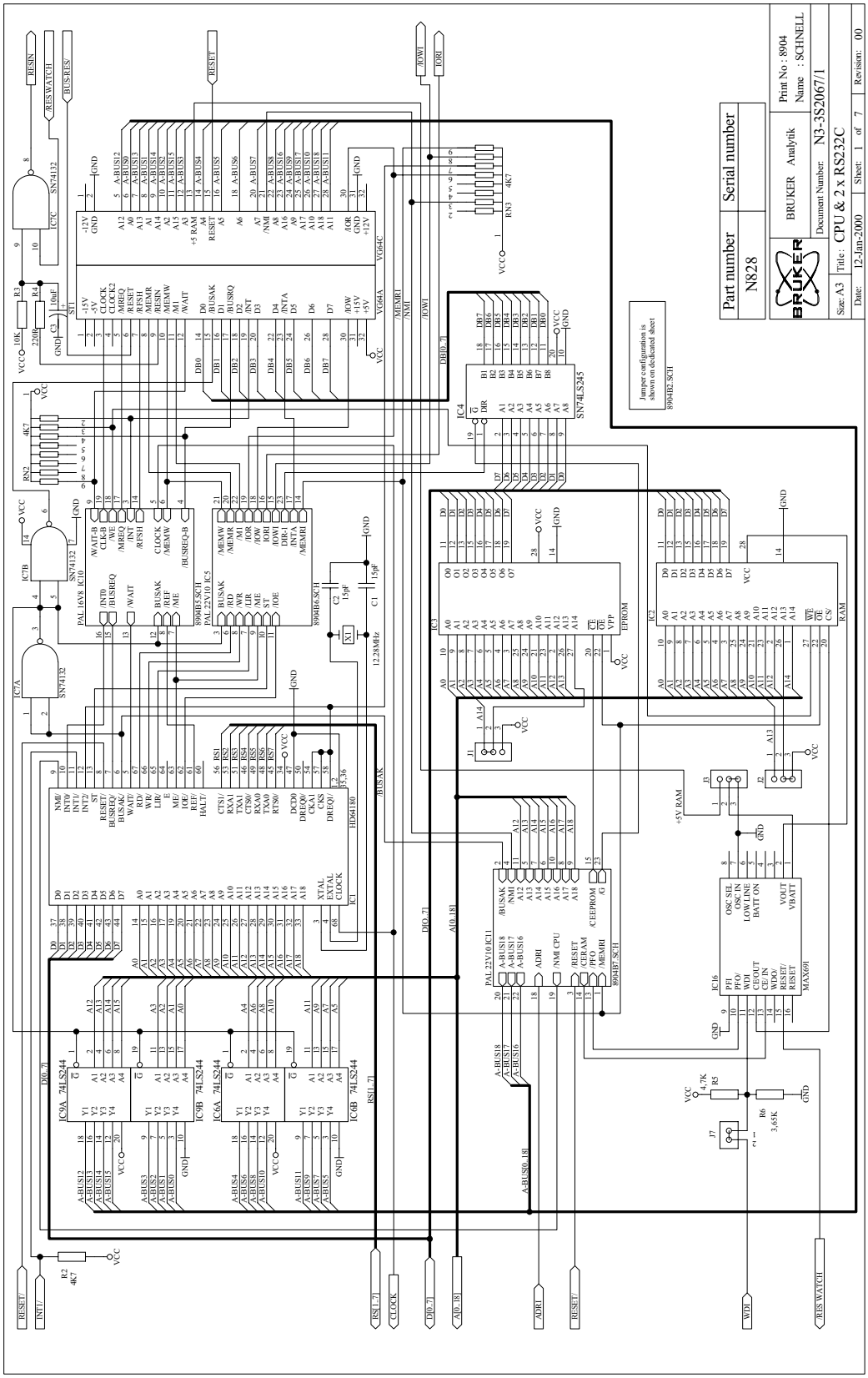

2x RS232 interfacet *3.4.1*

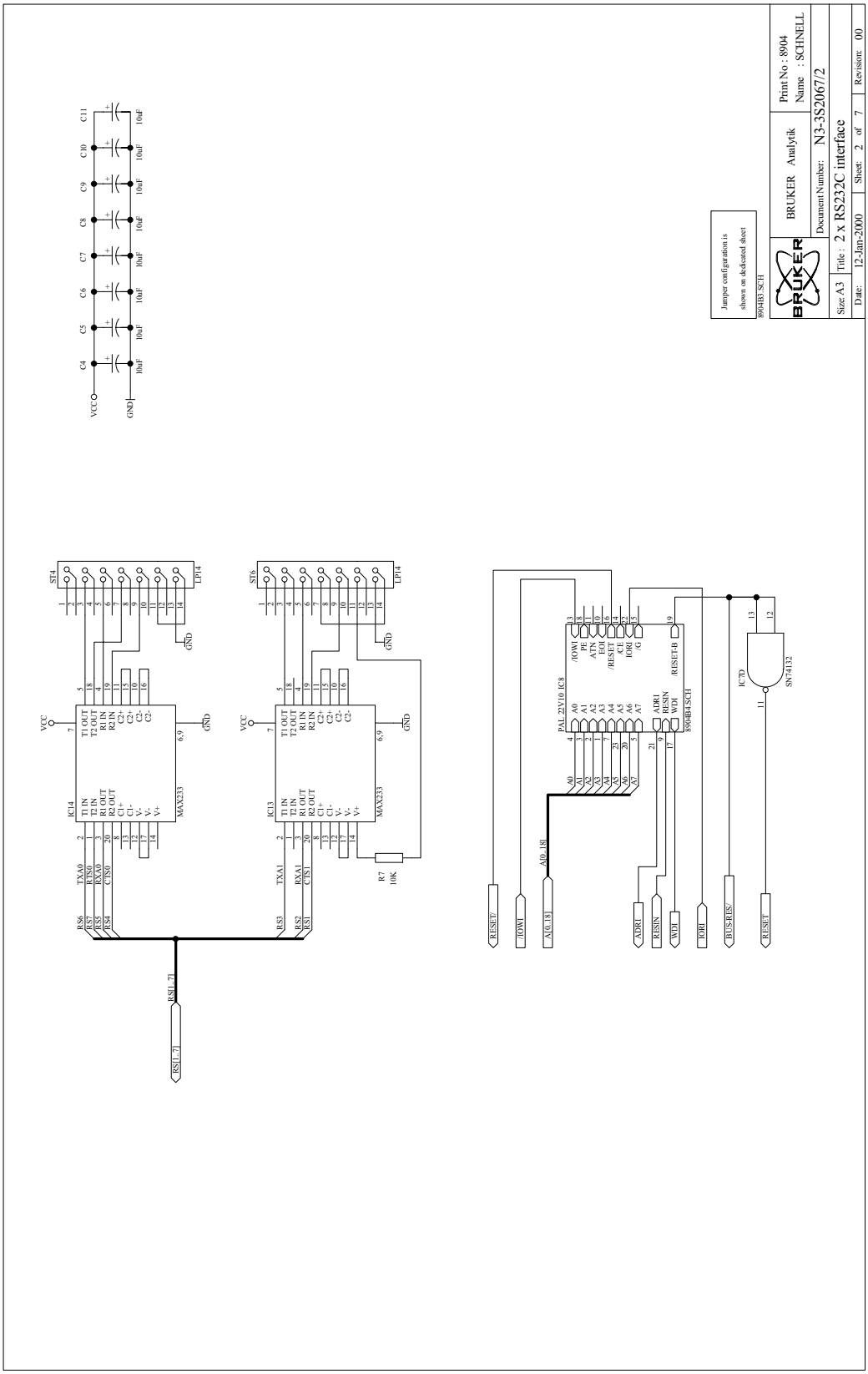

Jumper configuration 1x RS232C *3.4.2*

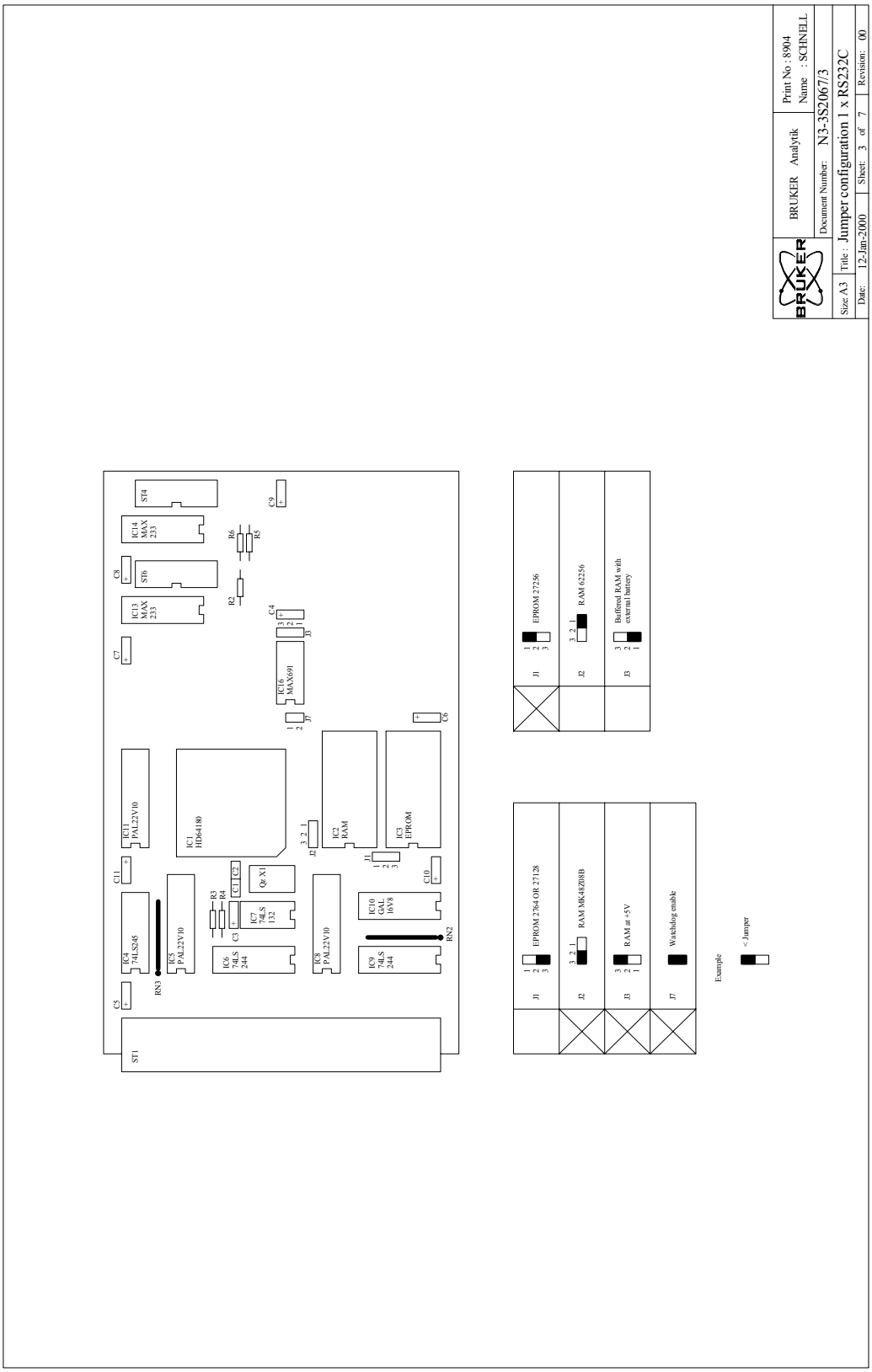

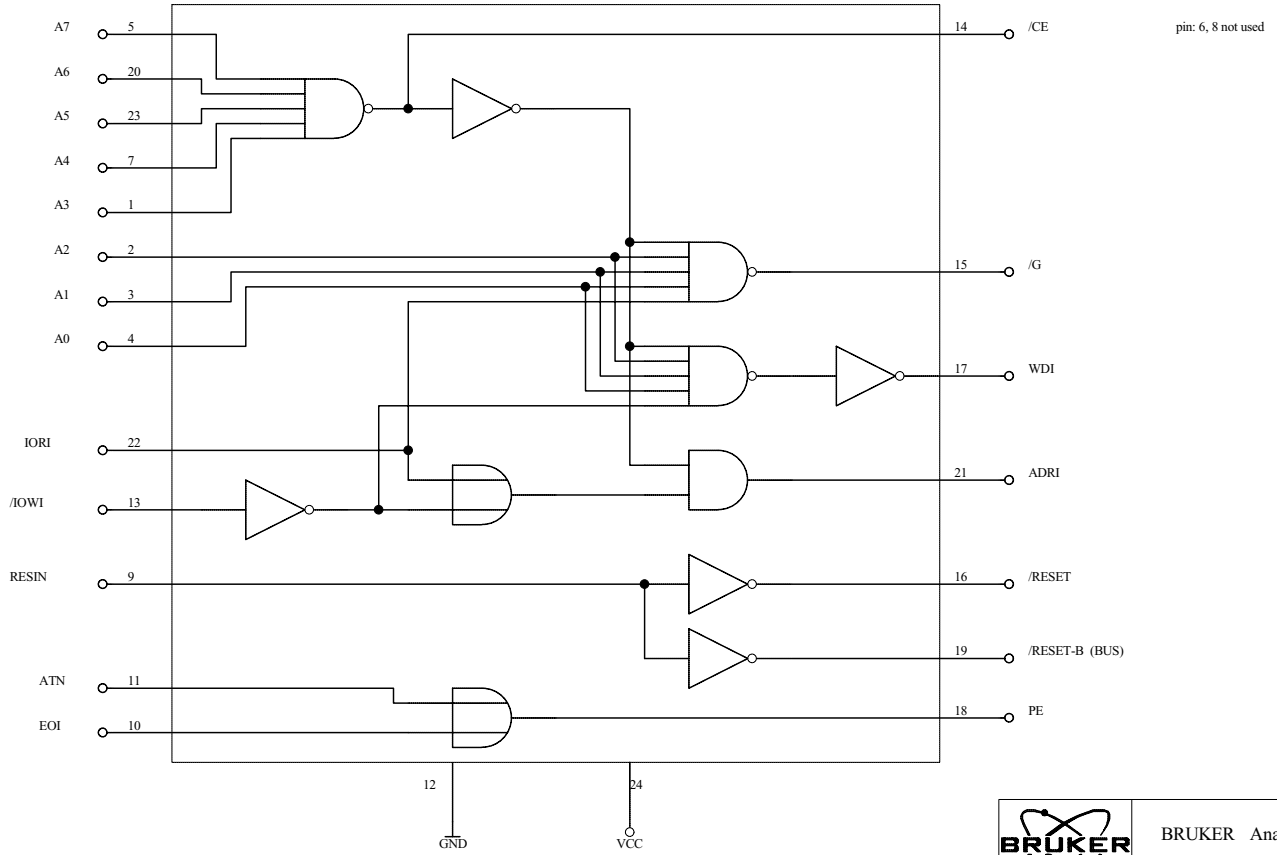

BRUKER	BRUKER Analytik	Print No : 8904 Name : SCHNELL
	Document Number: N3-3S2067/4	
Size: A4	Title : PAL22V10 or equivalent board 8904 IC8	
Date: 12-Jan-2000	Sheet: 4 of 7	Revision: 00

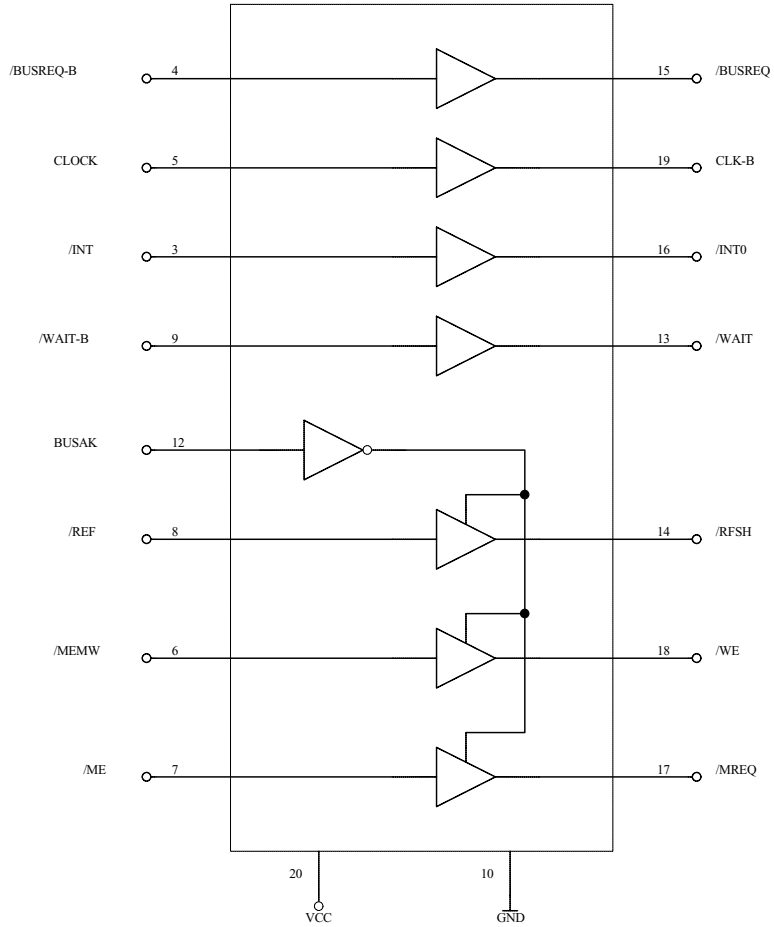

pin 1, 2, 11 : not used

BRUKER	BRUKER Analytik	Print No : 8904 Name : SCHNELL
	Document Number: N3-3S2067/5	
Size: A4	Title : PAL16V8 or equivalent board 8904 IC10	
Date: 12-Jan-2000	Sheet: 5 of 7	Revision: 00

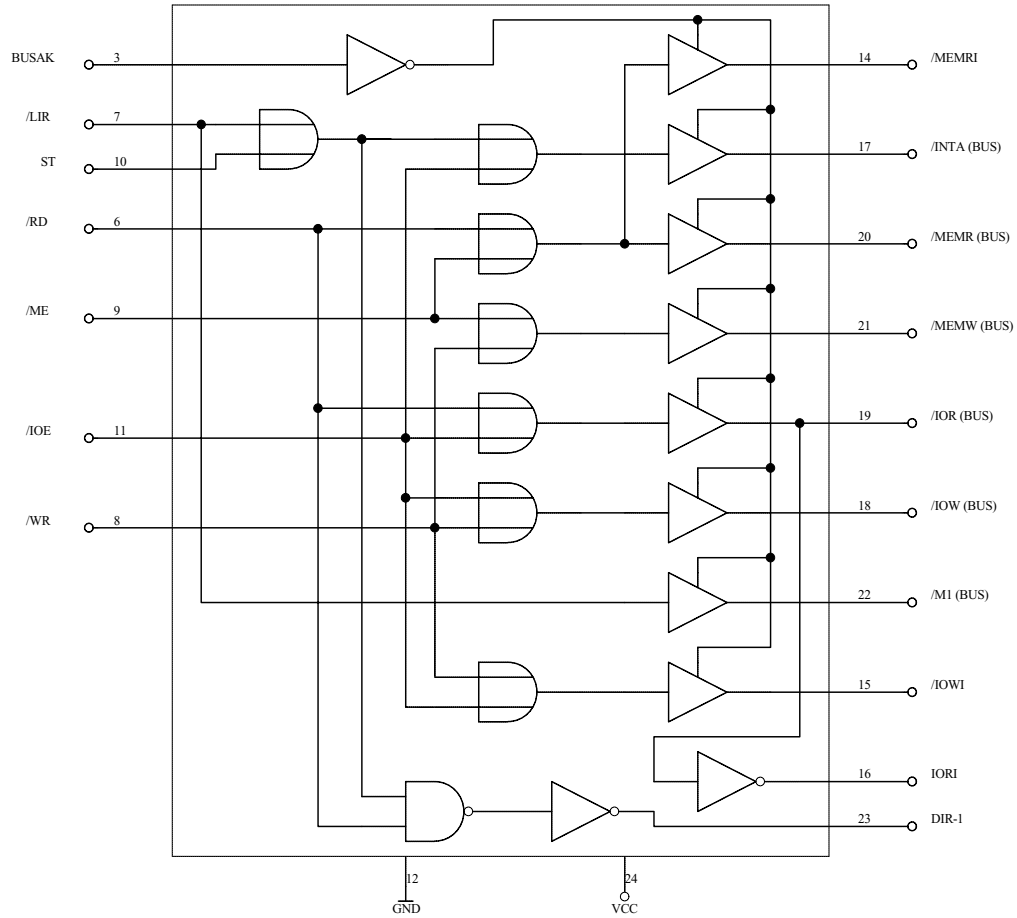

pin: 1, 2, 4, 5, 13 not used

BRUKER	BRUKER Analytik	Print No : 8904 Name : SCHNELL	
	Document Number: N3-3S2067/6		
Size: A4	Title : PAL 22V10 or equ. bd 8904 IC5 vers A5		
Date: 12-Jan-2000	Sheet: 6 of 7	Revision: 00	

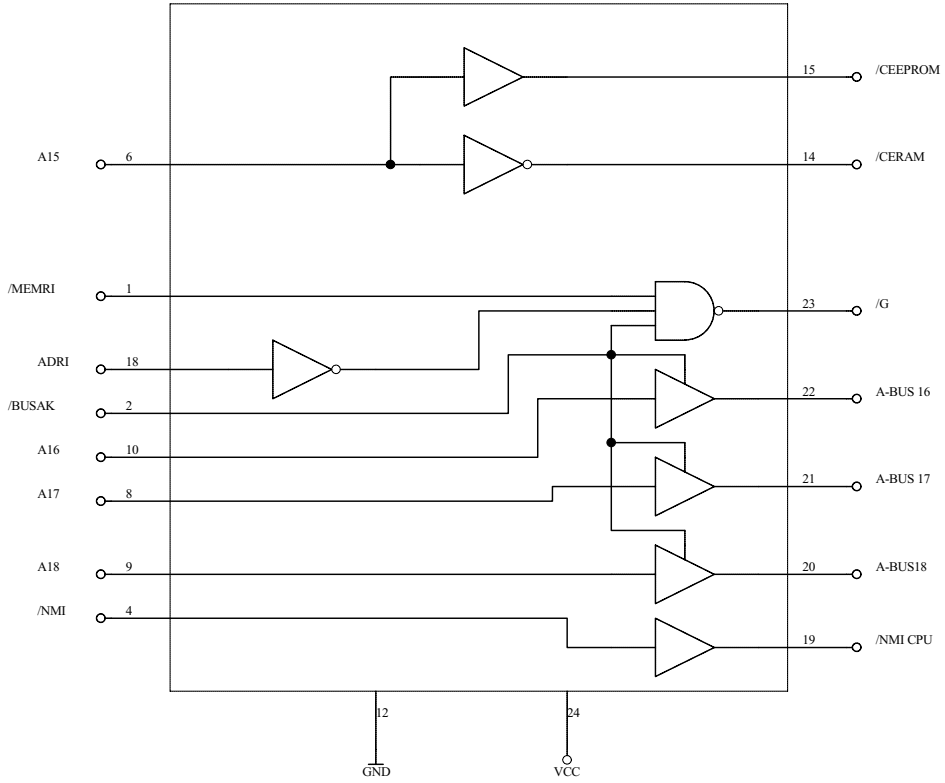

pin 3,5,7,11, 13,16,17 => not used

BRUKER	BRUKER Analytik	Print No : 8904 Name : SCHNELL
	Document Number: N3-3S2067/7	
Size: A4	Title : PAL22V10 or equ. bd 8904 IC11 vers F11	
Date: 12-Jan-2000	Sheet: 7 of 7	Revision: 00

REM.CONTROL UNIT ELCTR.BOARDS

4

Display BMC20 *4.1*

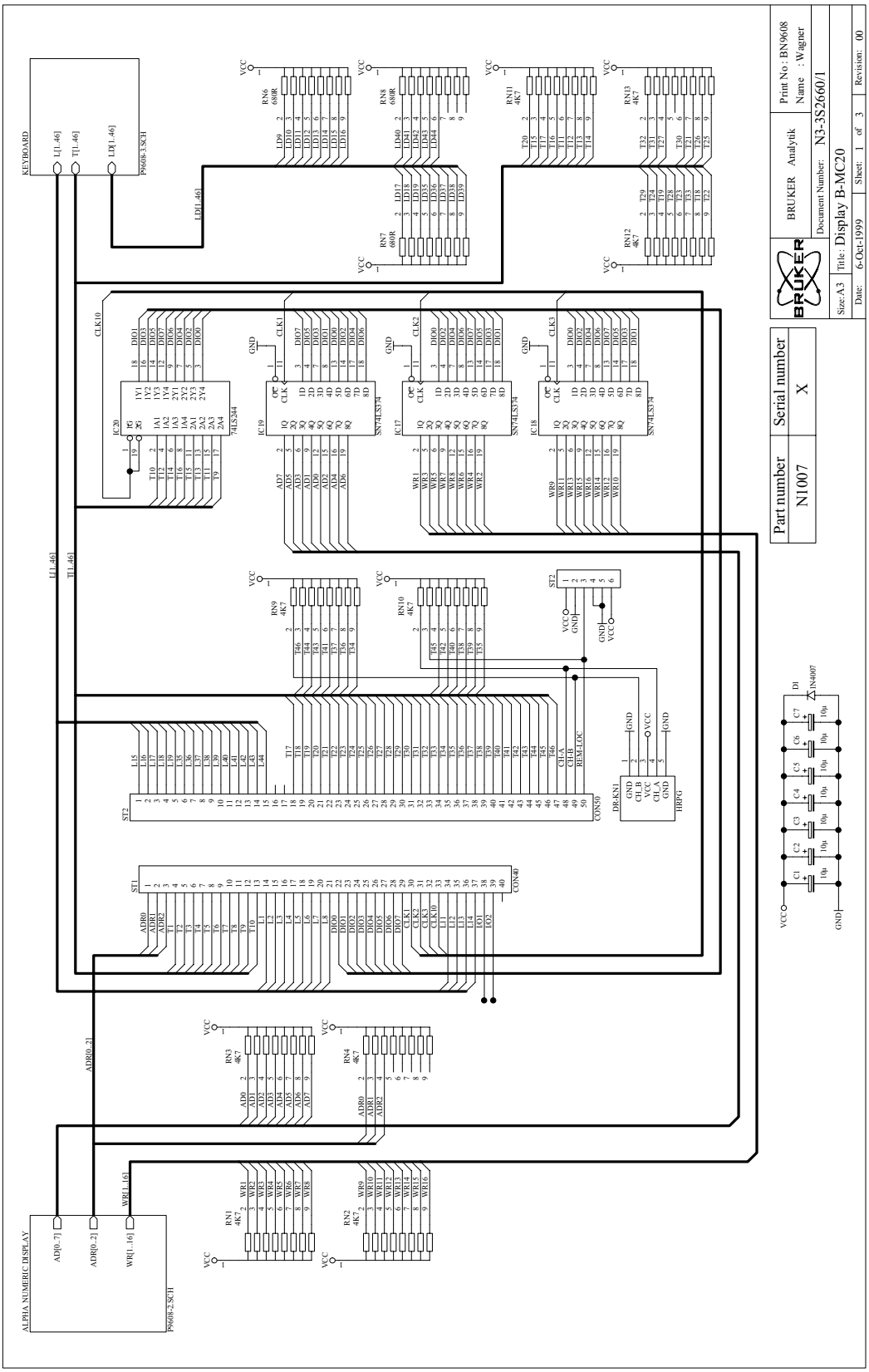

Alpha numeric display *4.1.1*

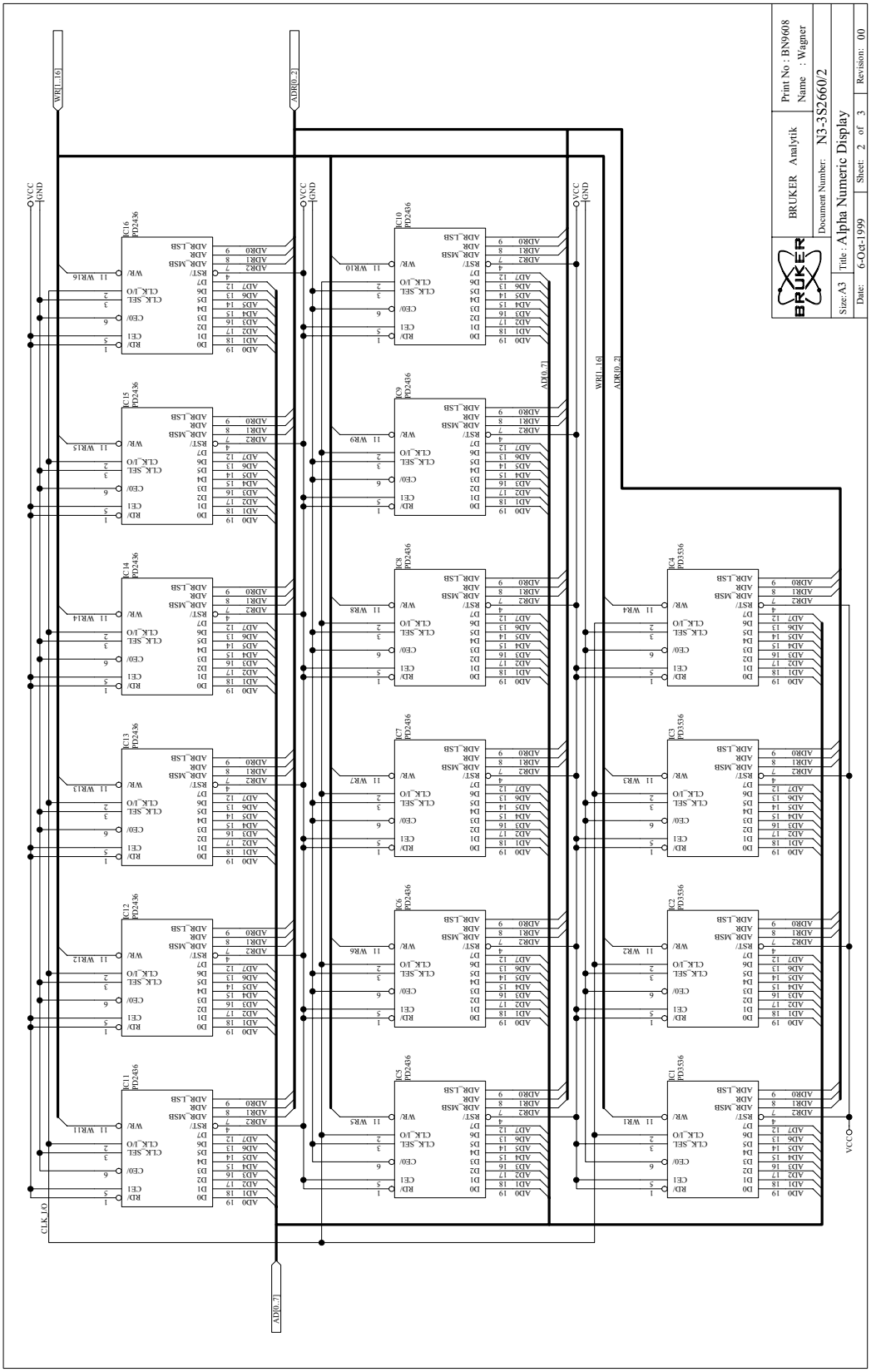

Keyboard BMC20 *4.1.2*

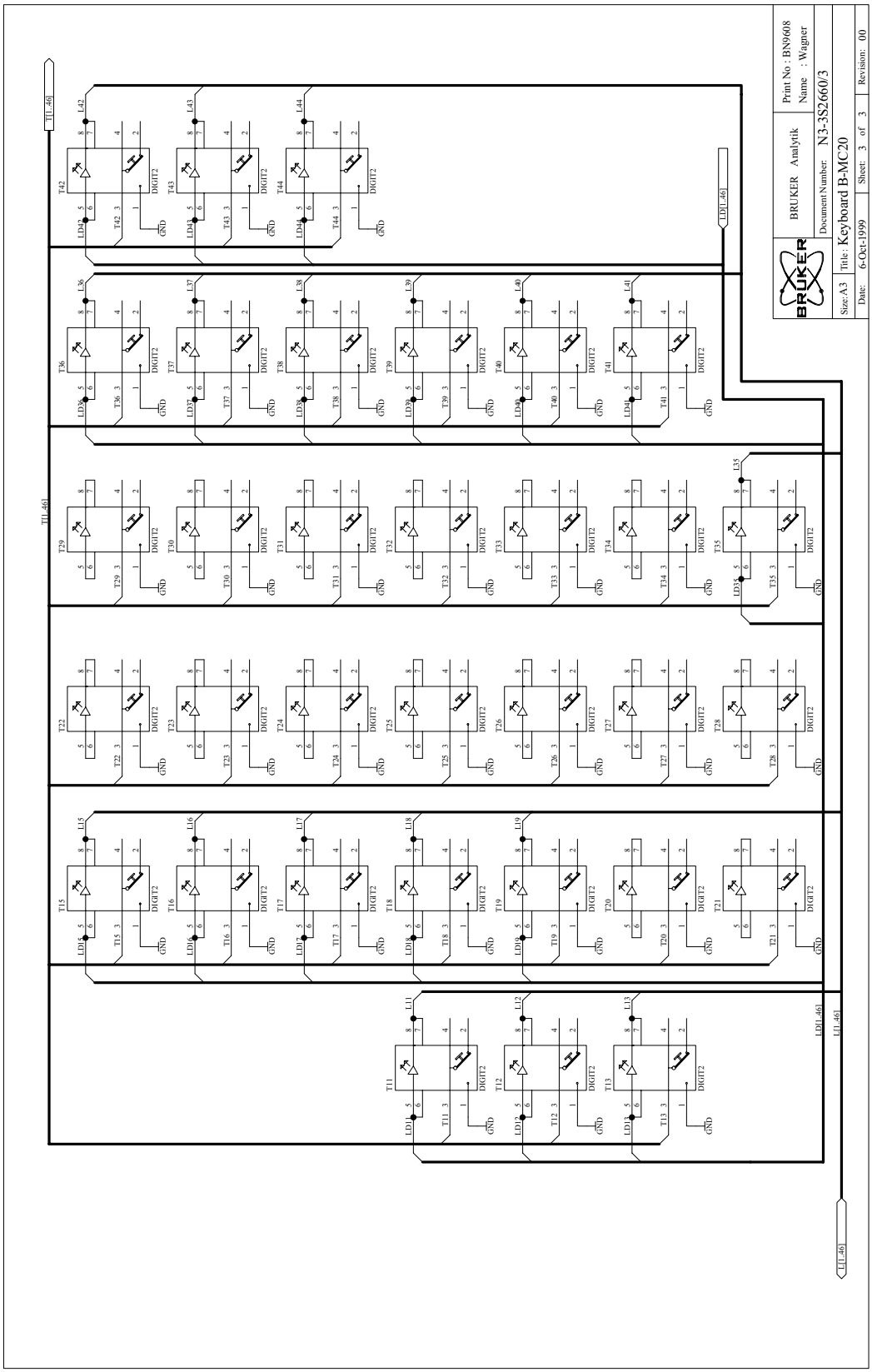

Display PIO *4.2*

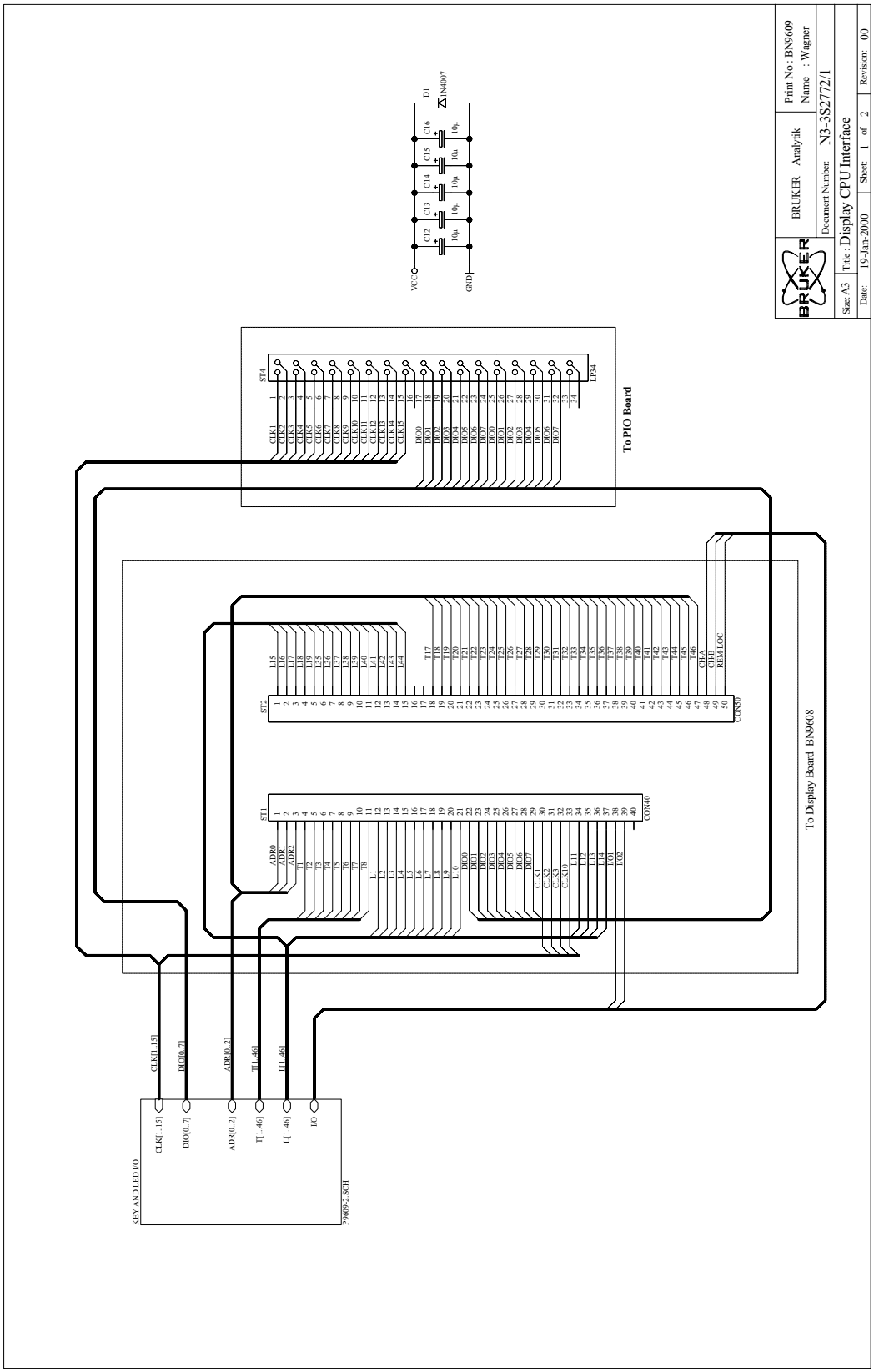

Key and Led I/O *4.2.1*

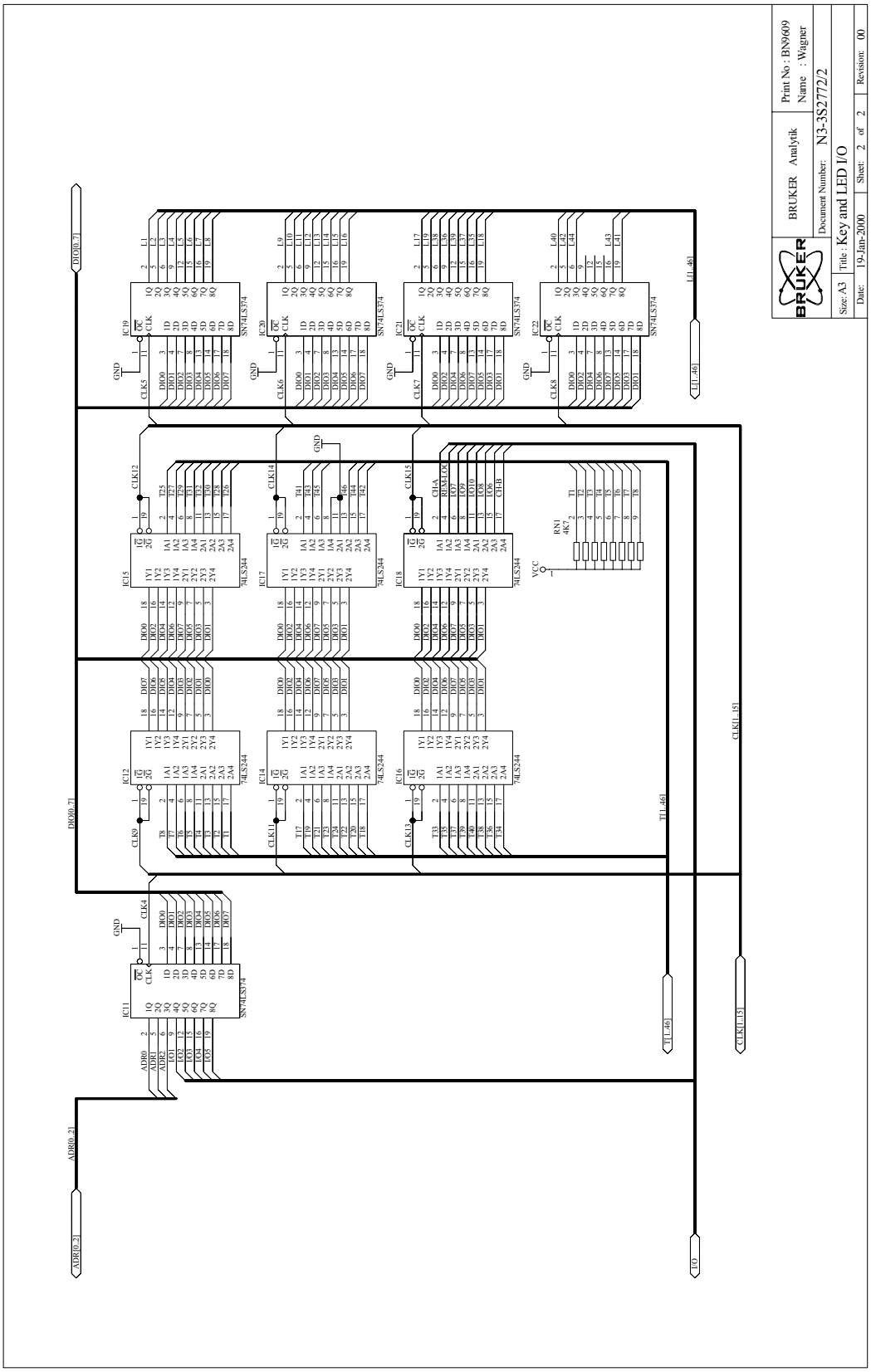

Parallel I/O *4.3*

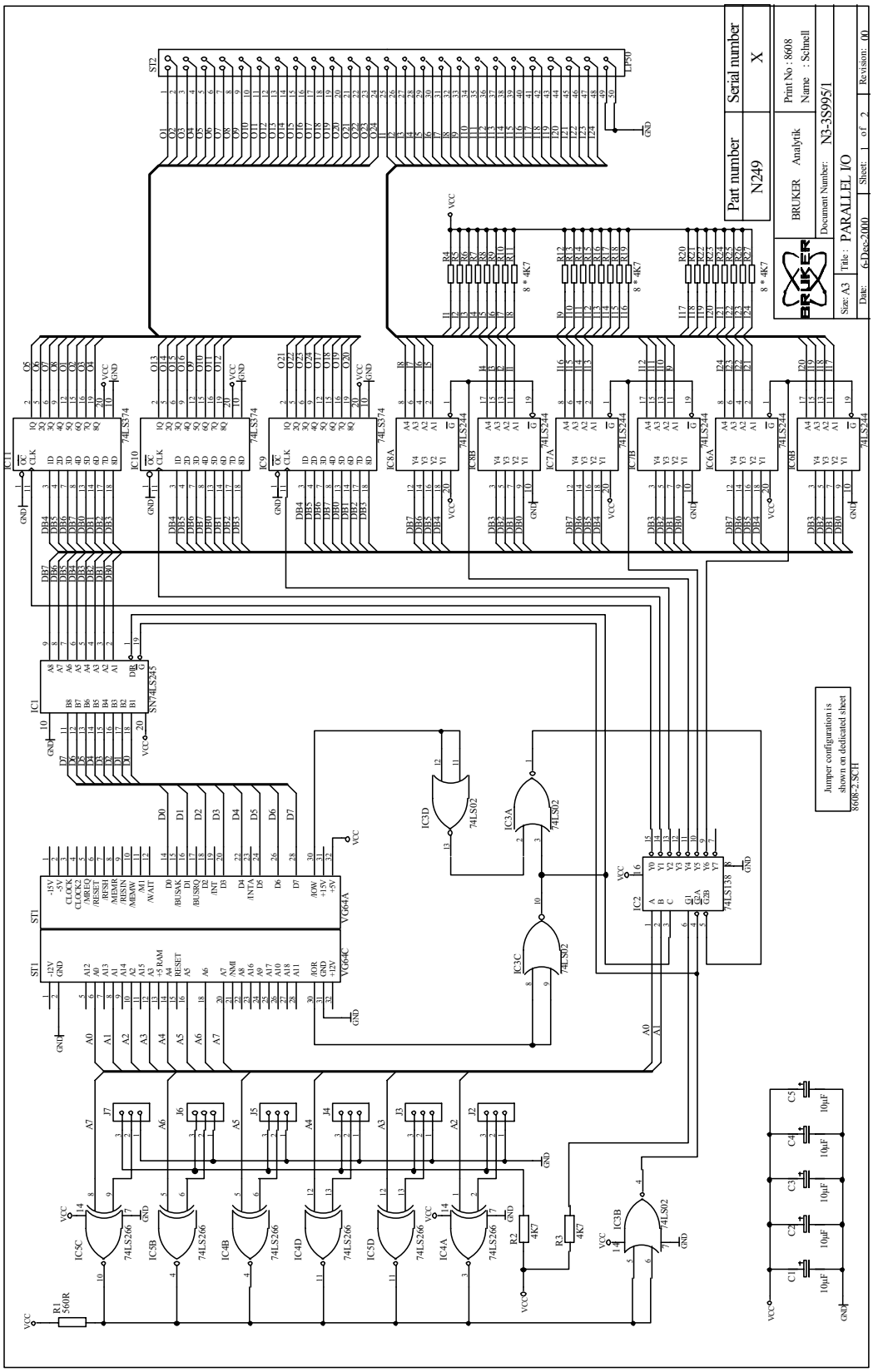

Layout ***4.3.1***

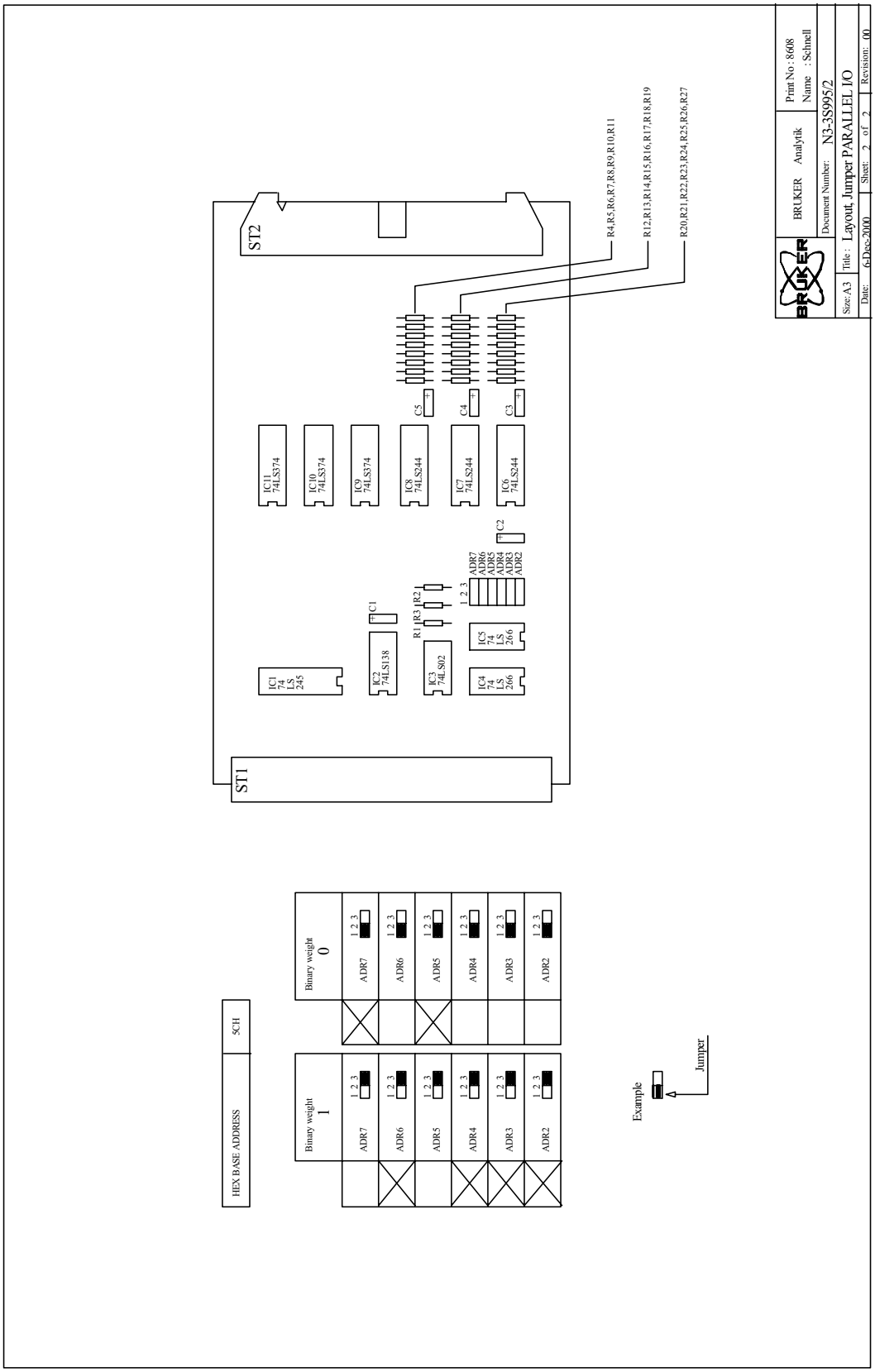
ST2
ST1
R4,R5,R6,R7,R8,R9,R10,R11
R12,R13,R14,R15,R16,R17,R18,R19
R20,R21,R22,R23,R24,R25,R26,R27
IC11 74LS374
IC10 74LS374
IC9 74LS374
IC8 74LS244
IC7 74LS244
IC6 74LS244
C5
C4
C3
C2
C1
IC1 74 LS 245
IC2 74LS138
IC3 74LS02
IC4 74 LS 266
IC5 74 LS 266
R1
R2
R3
ADR7 ADR6 ADR5 ADR4 ADR3 ADR2
1 2 3
HEX BASE ADDRESS
5CH
Binary weight 1
Binary weight 0
ADR7
ADR6
ADR5
ADR4
ADR3
ADR2
Example
Jumper
BRUKER
BRUKER Analytik
Print No : 8608
Name : Schnell
Document Number: N3-3S995/2
Size: A3
Title : Layout, Jumper PARALLEL I/O
Date: 6-Dec-2000
Sheet: 2 of 2
Revision: 00

Cabinet electronic boards

5

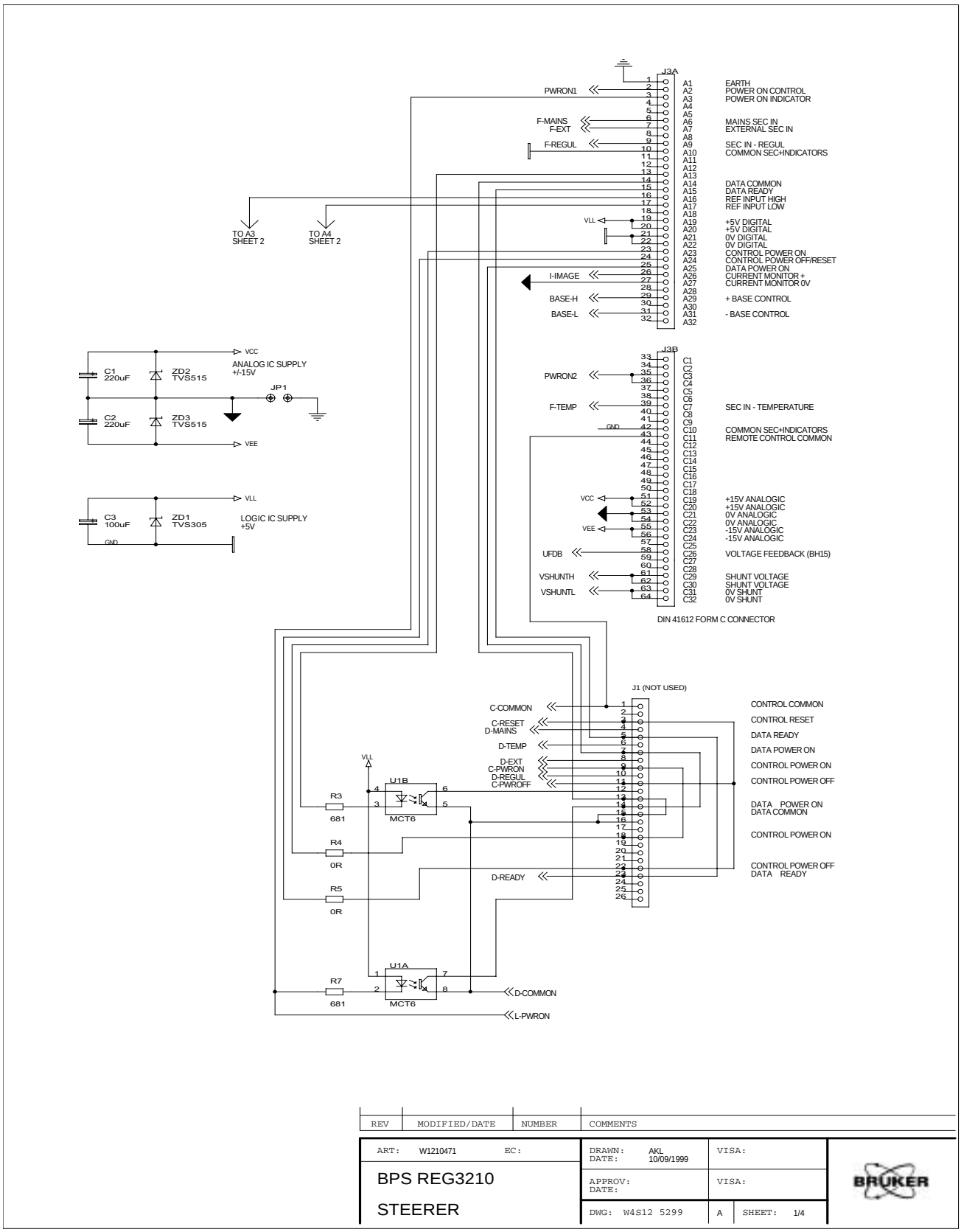
J3A
PWRON1
F-MAINS
F-EXT
F-REGUL
TO A3 SHEET 2
TO A4 SHEET 2
I-IMAGE
BASE-H
BASE-L
A1 EARTH
A2 POWER ON CONTROL
A3 POWER ON INDICATOR
A6 MAINS SEC IN
A7 EXTERNAL SEC IN
A9 SEC IN - REGUL
A10 COMMON SEC+INDICATORS
A14 DATA COMMON
A15 DATA READY
A16 REF INPUT HIGH
A17 REF INPUT LOW
A19 +5V DIGITAL
A20 +5V DIGITAL
A21 0V DIGITAL
A22 0V DIGITAL
A23 CONTROL POWER ON
A24 CONTROL POWER OFF/RESET
A25 DATA POWER ON
A26 CURRENT MONITOR +
A27 CURRENT MONITOR 0V
A29 + BASE CONTROL
A31 - BASE CONTROL
VCC
ANALOG IC SUPPLY +/-15V
C1 220uF
ZD2 TVS515
JP1
C2 220uF
ZD3 TVS515
VEE
VLL
C3 100uF
ZD1 TVS305
LOGIC IC SUPPLY +5V
GND
J3B
PWRON2
F-TEMP
GND
C7 SEC IN - TEMPERATURE
C10 COMMON SEC+INDICATORS
C11 REMOTE CONTROL COMMON
VCC
VEE
UFDB
VSHUNTH
VSHUNTL
C19 +15V ANALOGIC
C20 +15V ANALOGIC
C21 0V ANALOGIC
C22 0V ANALOGIC
C23 -15V ANALOGIC
C24 -15V ANALOGIC
C26 VOLTAGE FEEDBACK (BH15)
C29 SHUNT VOLTAGE
C30 SHUNT VOLTAGE
C31 0V SHUNT
C32 0V SHUNT
DIN 41612 FORM C CONNECTOR
J1 (NOT USED)
C-COMMON
C-RESET
D-MAINS
D-TEMP
D-EXT
C-PWRON
D-REGUL
C-PWROFF
D-READY
CONTROL COMMON
CONTROL RESET
DATA READY
DATA POWER ON
CONTROL POWER ON
CONTROL POWER OFF
DATA POWER ON
DATA COMMON
CONTROL POWER ON
CONTROL POWER OFF
DATA READY
U1B
MCT6
R3 681
R4 0R
R5 0R
U1A
MCT6
R7 681
D-COMMON
L-PWRON
REV
MODIFIED/DATE
NUMBER
COMMENTS
ART: W1210471
EC:
DRAWN: AKL
DATE: 10/09/1999
VISA:
BPS REG3210
STEERER
APPROV:
DATE:
VISA:
DWG: W4S12 5299
A
SHEET: 1/4
BRUKER

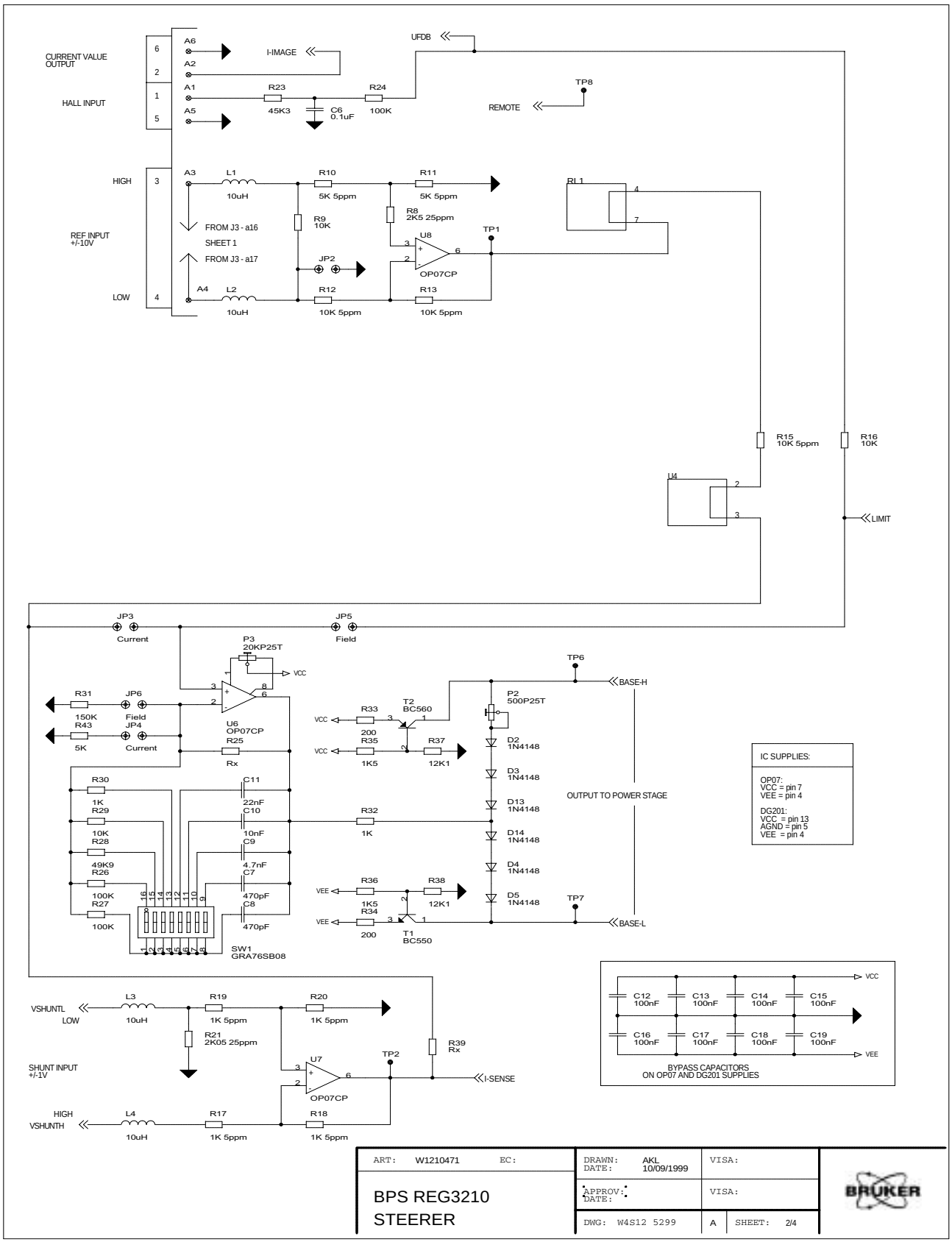
CURRENT VALUE OUTPUT
HALL INPUT
HIGH
REF INPUT +/-10V
LOW
A6
A2
A1
A5
A3
A4
I-IMAGE
UFDB
R23 45K3
C6 0.1uF
R24 100K
TP8
REMOTE
L1 10uH
R10 5K 5ppm
R11 5K 5ppm
R9 10K
R8 2K5 25ppm
U8 OP07CP
TP1
FROM J3 - a16
SHEET 1
FROM J3 - a17
JP2
L2 10uH
R12 10K 5ppm
R13 10K 5ppm
RL1
R15 10K 5ppm
R16 10K
U4
LIMIT
JP3 Current
JP5 Field
P3 20KP25T
VCC
U6 OP07CP
R31 150K
JP6 Field
R43 5K
JP4 Current
R25 Rx
R33 200
T2 BC560
R35 1K5
R37 12K1
TP6
BASE-H
P2 500P25T
D2 1N4148
D3 1N4148
D13 1N4148
D14 1N4148
D4 1N4148
D5 1N4148
OUTPUT TO POWER STAGE
IC SUPPLIES:
OP07:
VCC = pin 7
VEE = pin 4
DG201:
VCC = pin 13
AGND = pin 5
VEE = pin 4
R30 1K
R29 10K
R28 49K9
R26 100K
R27 100K
C11 22nF
C10 10nF
C9 4.7nF
C7 470pF
C8 470pF
R32 1K
R36 1K5
R34 200
R38 12K1
T1 BC550
TP7
BASE-L
SW1 GRA76SB08
VEE
VSHUNTL LOW
L3 10uH
R19 1K 5ppm
R20 1K 5ppm
R21 2K05 25ppm
SHUNT INPUT +/-1V
U7 OP07CP
TP2
R39 Rx
I-SENSE
HIGH VSHUNTH
L4 10uH
R17 1K 5ppm
R18 1K 5ppm
C12 100nF
C13 100nF
C14 100nF
C15 100nF
C16 100nF
C17 100nF
C18 100nF
C19 100nF
BYPASS CAPACITORS ON OP07 AND DG201 SUPPLIES
ART: W1210471 EC:
BPS REG3210 STEERER
DRAWN: AKL DATE: 10/09/1999
VISA:
APPROV: DATE:
VISA:
DWG: W4S12 5299 A SHEET: 2/4
BRUKER

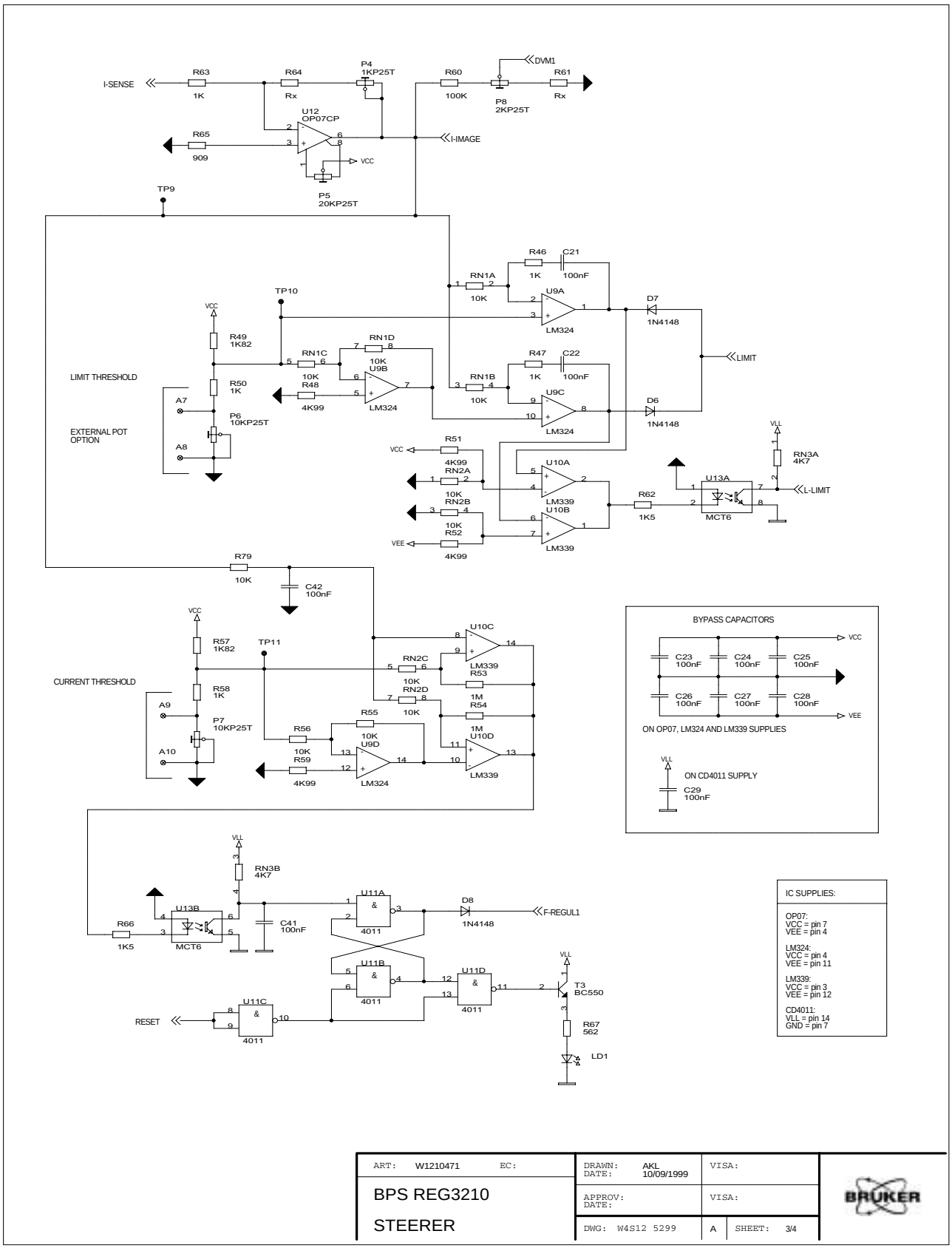
I-SENSE
R63
1K
R64
Rx
P4
1KP25T
R60
100K
DVM1
P8
2KP25T
R61
Rx
U12
OP07CP
R65
909
VCC
I-IMAGE
P5
20KP25T
TP9
R46
1K
C21
100nF
RN1A
10K
U9A
LM324
D7
1N4148
TP10
VCC
R49
1K82
RN1D
10K
U9B
RN1C
10K
R48
4K99
LIMIT THRESHOLD
R50
1K
A7
P6
10KP25T
EXTERNAL POT
OPTION
A8
R47
1K
C22
100nF
RN1B
10K
U9C
LM324
D6
1N4148
LIMIT
R51
4K99
RN2A
10K
RN2B
10K
R52
4K99
U10A
LM339
U10B
LM339
R62
1K5
U13A
MCT6
VLL
RN3A
4K7
L-LIMIT
R79
10K
C42
100nF
VCC
R57
1K82
TP11
CURRENT THRESHOLD
R58
1K
A9
P7
10KP25T
A10
U10C
LM339
RN2C
10K
R53
RN2D
10K
1M
R54
R55
10K
U9D
R56
10K
R59
4K99
LM324
1M
U10D
LM339
BYPASS CAPACITORS
VCC
C23
100nF
C24
100nF
C25
100nF
C26
100nF
C27
100nF
C28
100nF
VEE
ON OP07, LM324 AND LM339 SUPPLIES
VLL
ON CD4011 SUPPLY
C29
100nF
VLL
RN3B
4K7
U13B
MCT6
R66
1K5
C41
100nF
U11A
4011
D8
1N4148
F-REGUL1
U11B
4011
U11D
4011
T3
BC550
R67
562
LD1
U11C
4011
RESET
IC SUPPLIES:
OP07:
VCC = pin 7
VEE = pin 4
LM324:
VCC = pin 4
VEE = pin 11
LM339:
VCC = pin 3
VEE = pin 12
CD4011:
VLL = pin 14
GND = pin 7
ART: W1210471 EC:
BPS REG3210
STEERER
DRAWN: AKL
DATE: 10/09/1999
VISA:
APPROV:
DATE:
VISA:
DWG: W4S12 5299
A
SHEET: 3/4
BRUKER

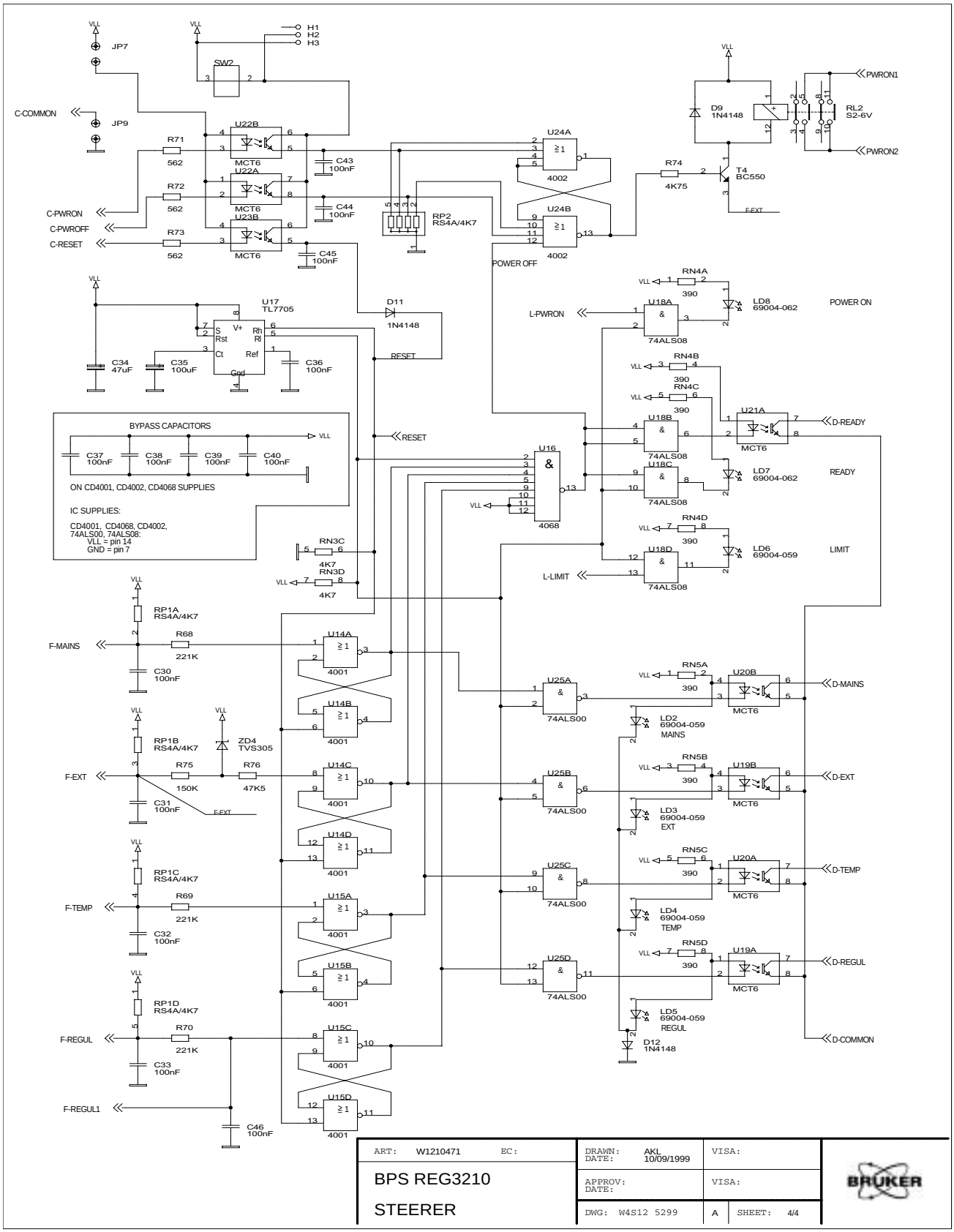
VLL
JP7
H1
H2
H3
SW2
C-COMMON
JP9
R71
562
U22B
MCT6
C43
100nF
R72
562
U22A
MCT6
C44
100nF
C-PWRON
C-PWROFF
C-RESET
R73
562
U23B
MCT6
C45
100nF
U24A
4002
U24B
4002
RP2
RS4A/4K7
POWER OFF
D9
1N4148
RL2
S2-6V
PWRON1
PWRON2
R74
4K75
T4
BC550
F-EXT
U17
TL7705
C34
47uF
C35
100uF
C36
100nF
D11
1N4148
RESET
BYPASS CAPACITORS
C37
100nF
C38
100nF
C39
100nF
C40
100nF
ON CD4001, CD4002, CD4068 SUPPLIES
IC SUPPLIES:
CD4001, CD4068, CD4002,
74ALS00, 74ALS08:
VLL = pin 14
GND = pin 7
U16
4068
RN3C
4K7
RN3D
4K7
RN4A
390
LD8
69004-062
POWER ON
L-PWRON
U18A
74ALS08
RN4B
390
RN4C
390
U18B
74ALS08
U21A
MCT6
D-READY
U18C
74ALS08
LD7
69004-062
READY
RN4D
390
LD6
69004-059
LIMIT
U18D
74ALS08
L-LIMIT
RP1A
RS4A/4K7
F-MAINS
R68
221K
C30
100nF
U14A
4001
U14B
4001
RP1B
RS4A/4K7
ZD4
TVS305
F-EXT
R75
150K
R76
47K5
C31
100nF
U14C
4001
U14D
4001
RP1C
RS4A/4K7
F-TEMP
R69
221K
C32
100nF
U15A
4001
U15B
4001
RP1D
RS4A/4K7
F-REGUL
R70
221K
C33
100nF
U15C
4001
U15D
4001
F-REGUL1
C46
100nF
U25A
74ALS00
RN5A
390
U20B
MCT6
D-MAINS
LD2
69004-059
MAINS
U25B
74ALS00
RN5B
390
U19B
MCT6
D-EXT
LD3
69004-059
EXT
U25C
74ALS00
RN5C
390
U20A
MCT6
D-TEMP
LD4
69004-059
TEMP
U25D
74ALS00
RN5D
390
U19A
MCT6
D-REGUL
LD5
69004-059
REGUL
D12
1N4148
D-COMMON
ART: W1210471 EC:
BPS REG3210
STEERER
DRAWN: AKL
DATE: 10/09/1999
VISA:
APPROV:
DATE:
VISA:
DWG: W4S12 5299
A
SHEET: 4/4
BRUKER

Mains control 5.2

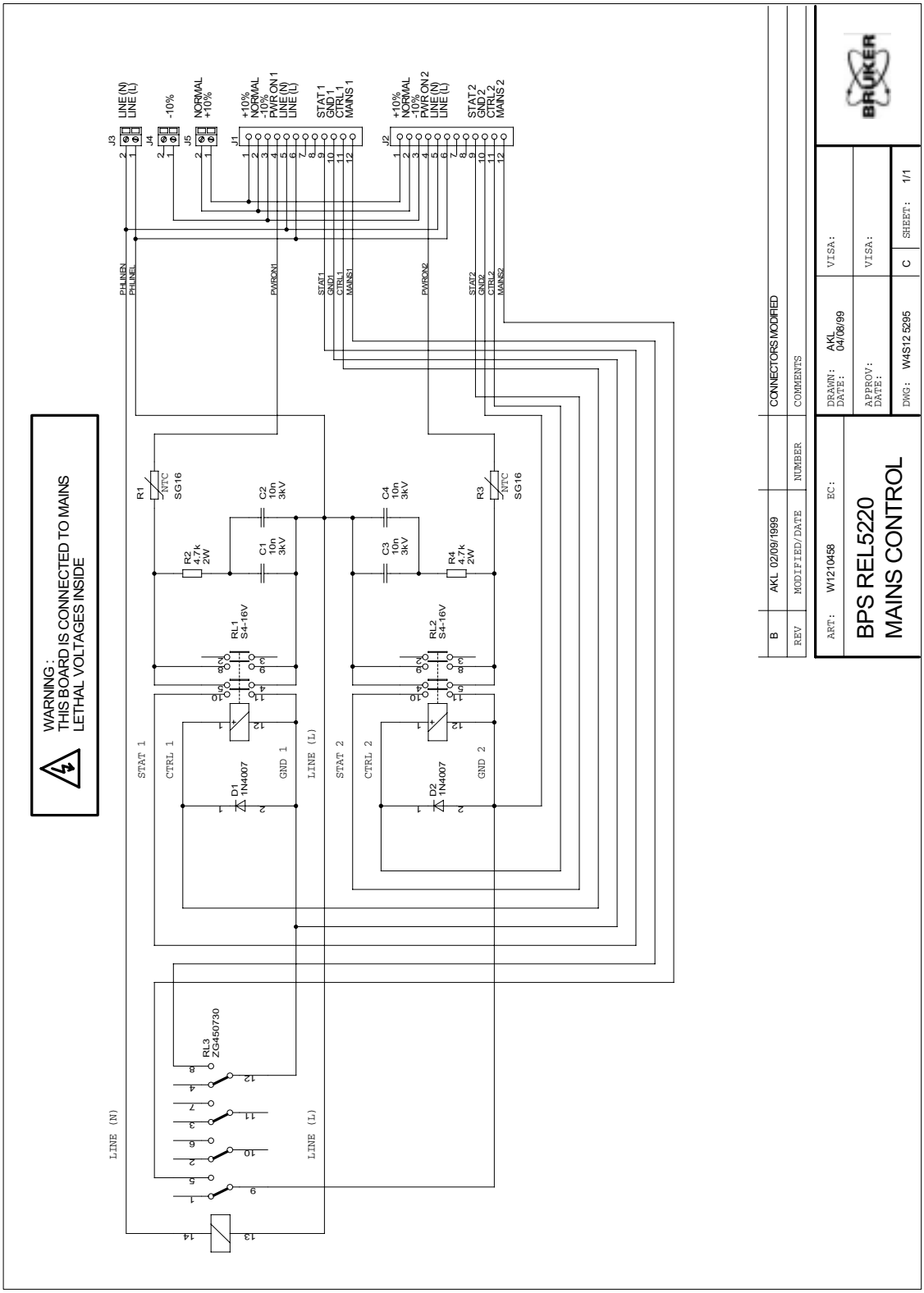

Power stage *5.3*

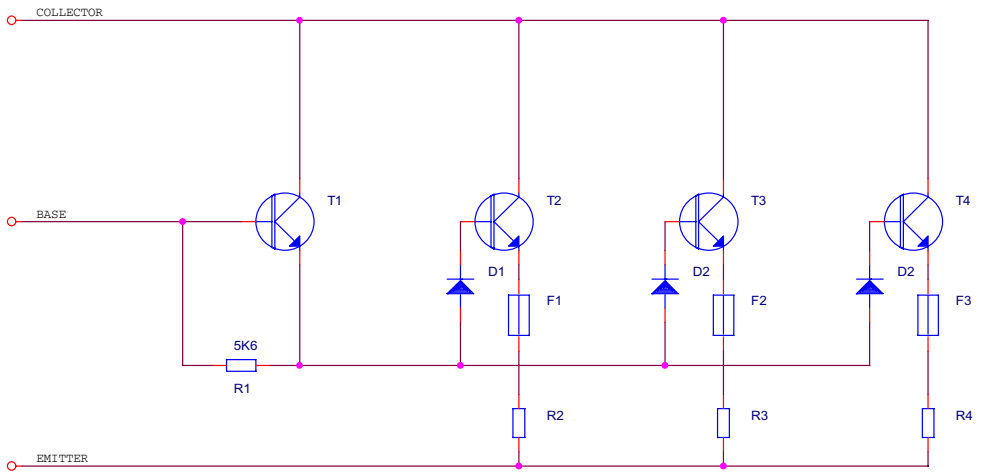

T=.....

D=.....

D3=.....

R=.....

F=.....

REV	MODIFIED/DATE	NUMBER	COMMENTS

ART: EC:1

BPS

POSITIF POWER STAGE 4 TR

DRAWN: SF
DATE: 97/01

VISA:

APPROV: JDH
DATE: 97/01

VISA:

DWG: W4S12 4691

SHEET: 1/1

S.a.d.i.s

BRUKER

SPECTROSPIN