REV.	DESCRIPTION	DRAWN / APPD.	DATE
	CONTROL ELECTRODE CABLE CORE MOVED.	GWS	1/14/05
	ADDED NEW MODULATOR PS.	GWS	9/1/05

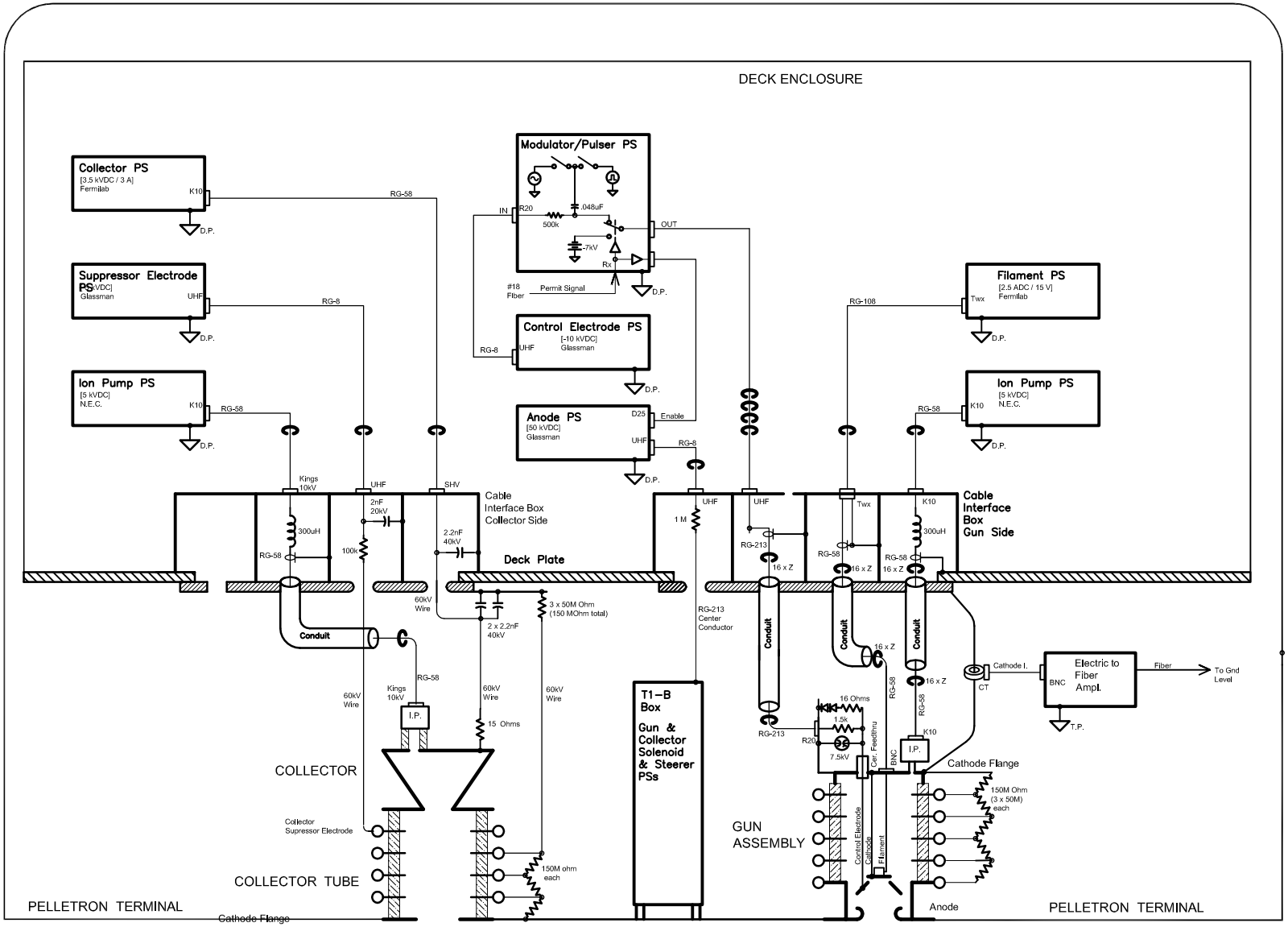

NOTES:

Connector Type Abbreviations

BNC - BNC
R20 - Reynolds 20 kV
K10 - Kings 10 kV
Tx - Fiber Optic Transimitter
Rx - Fiber Optic Receiver
D25 - D-Sub 25

Deck level local ground D.P.

Terminal level local ground T.P.

Ferrite Cable Core, 1 x Z = 100 Ohms @ 10 MHz, min.

Twinax Connector

Coaxial Connector

FILE: Z:/Projects/E-Cooling/5MVPelletron/Deck/DeckElectronics.dwg

ITEM NO.	PART NO.	DESCRIPTION OR SIZE	QTY. REQ.
		PARTS LIST	

UNLESS OTHERWISE SPECIFIED	ORIGINATOR	G. SAEWERT 6/02
FRACTIONS +/- DECIMALS +/- ANGLES +/-	DRAWN	G. SAEWERT 9/1/05
	CHECKED	
1. BREAK ALL SHARP EDGES 1/64" MAX. 2. DO NOT SCALE DRAWING. 3. DIMENSIONS IN ACCORD WITH ANSI Y14.5 STD'S.	APPROVED	
	USED ON	
MAX. ALL MACHINED SURFACE	MATERIAL	
AutoCAD RELEASE 12		

FERMI NATIONAL ACCELERATOR LABORATORY
UNITED STATES DEPARTMENT OF ENERGY

Electron Cooling
Pelletron Gun, Collector and Deck Electronics

SCALE	FILMED	DRAWING NUMBER	REV.
		-ED-	