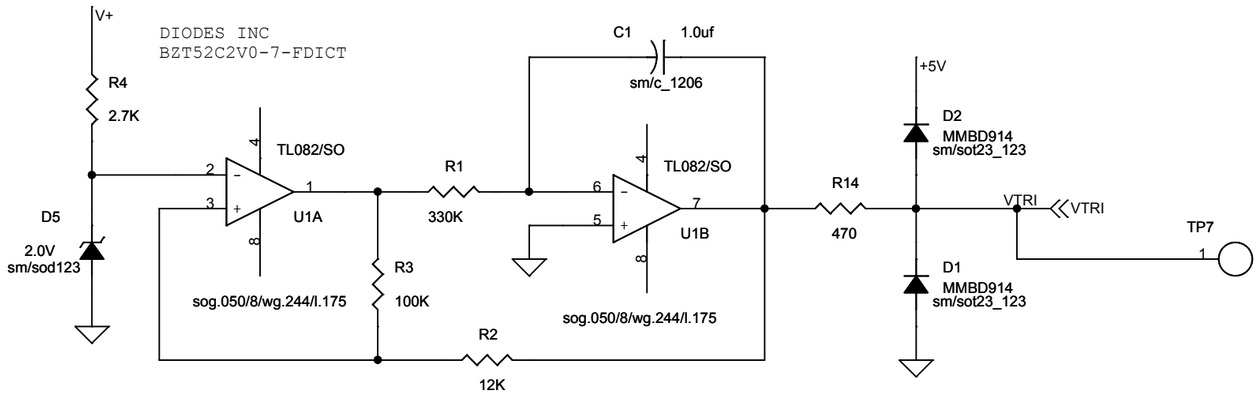

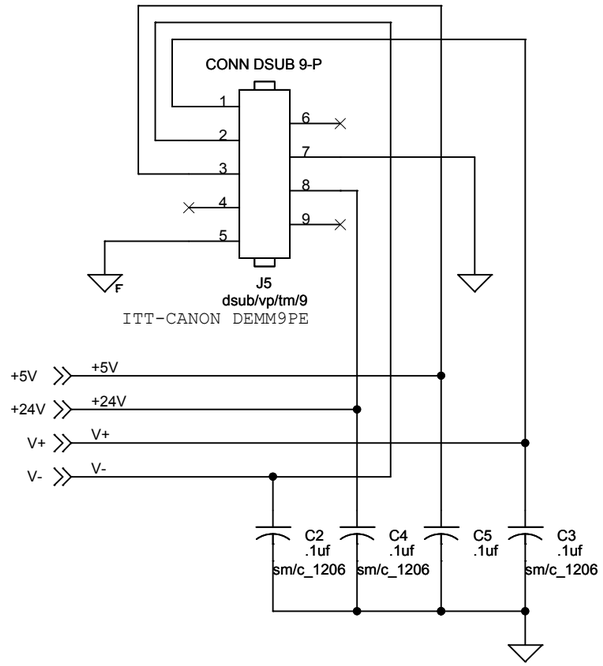

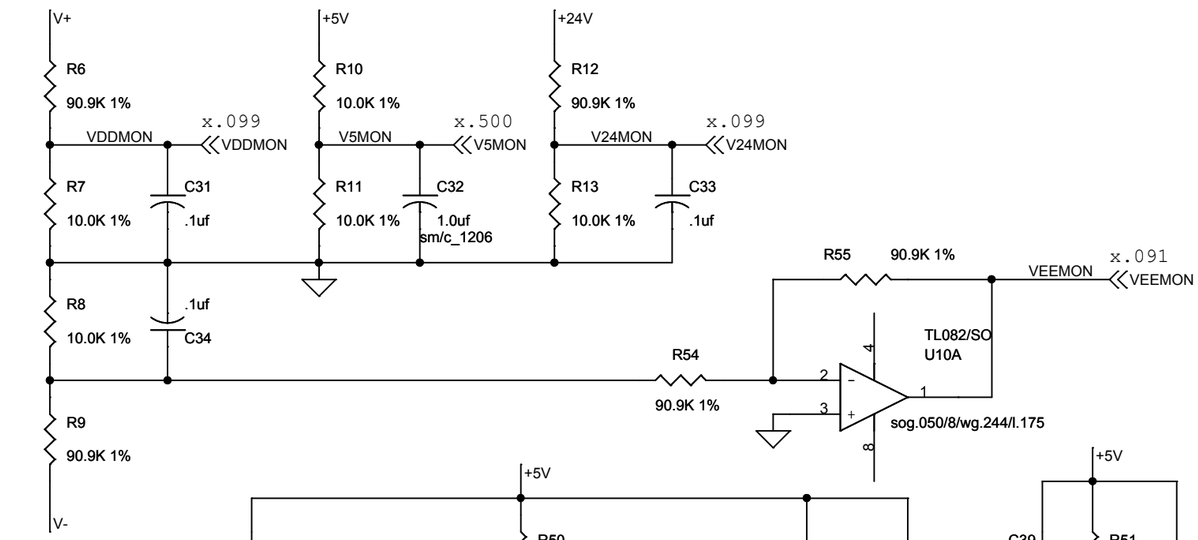

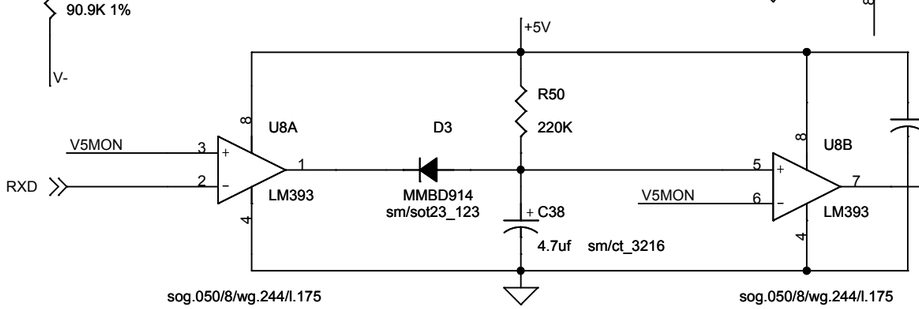

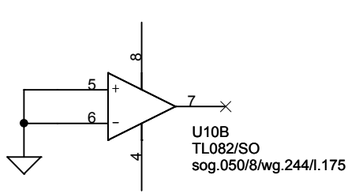

NOTES:
1. All attenuators 68.0K and 34.0K (x.333). Rin=102K
2. Each ADC count is 1mV at ADC pin, 3 mV at connector pin
3. SOT23 diode (MMBD914) footprint used in layout is incorrect

Fermilab
Accelerator Division / Controls Group

Title: Pelletron Light Link Diagnostic - PWR			
Size: B	Document Number: <Doc>	Originator: P. Kasley	Rev: O
Date: Thursday, February 17, 2011		Sheet 1 of 6	

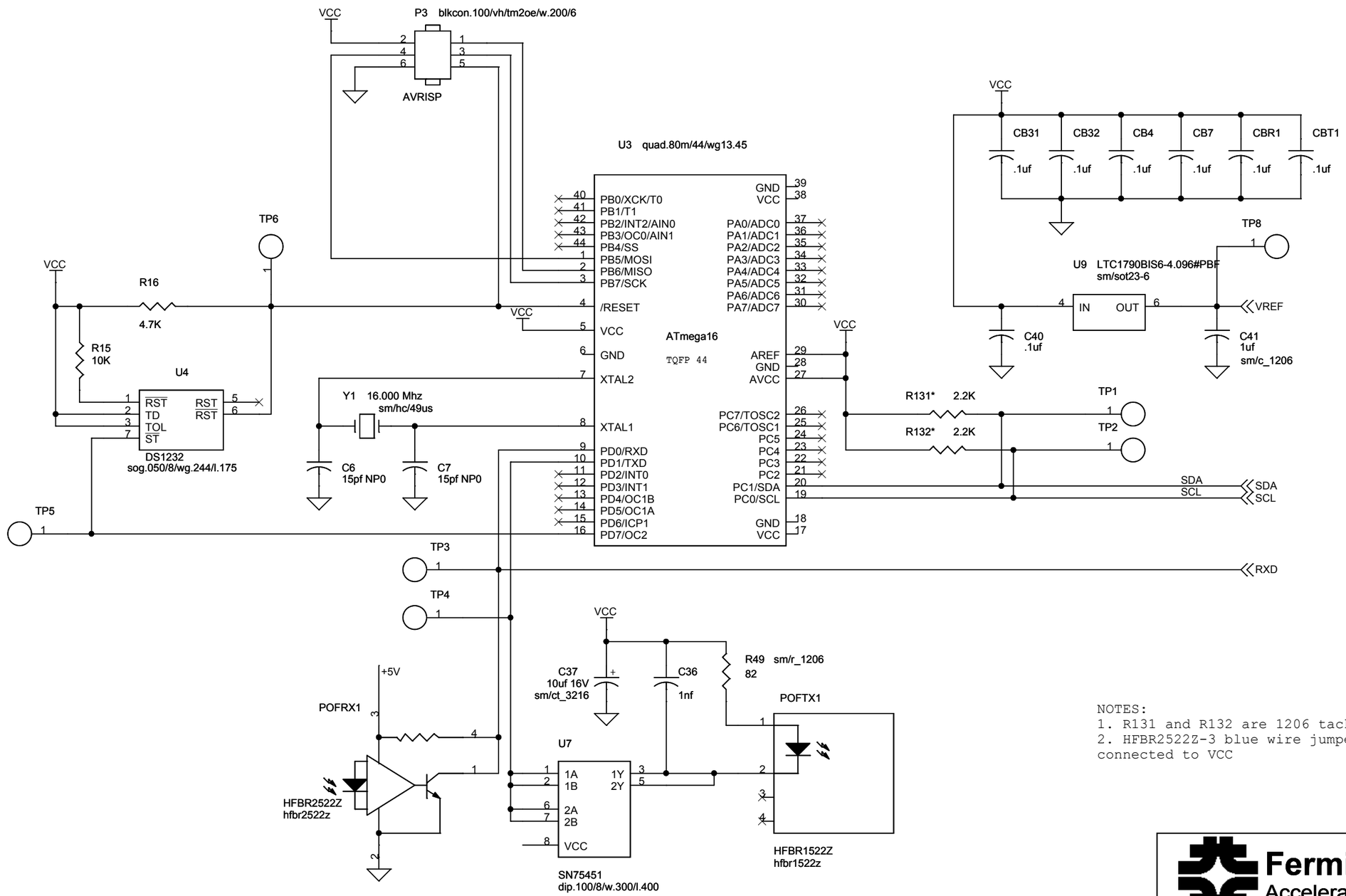

NOTES:
1. R131 and R132 are 1206 tacked onto board.
2. HFBR2522Z-3 blue wire jumpered to +5, was connected to VCC

Fermilab
Accelerator Division / Controls Group

Title: Pelletron Light Link Diagnostic - uP			
Size: B	Document Number: <Doc>	Originator: P. Kasley	Rev: O
Date: Thursday, February 17, 2011		Sheet 2 of 6	

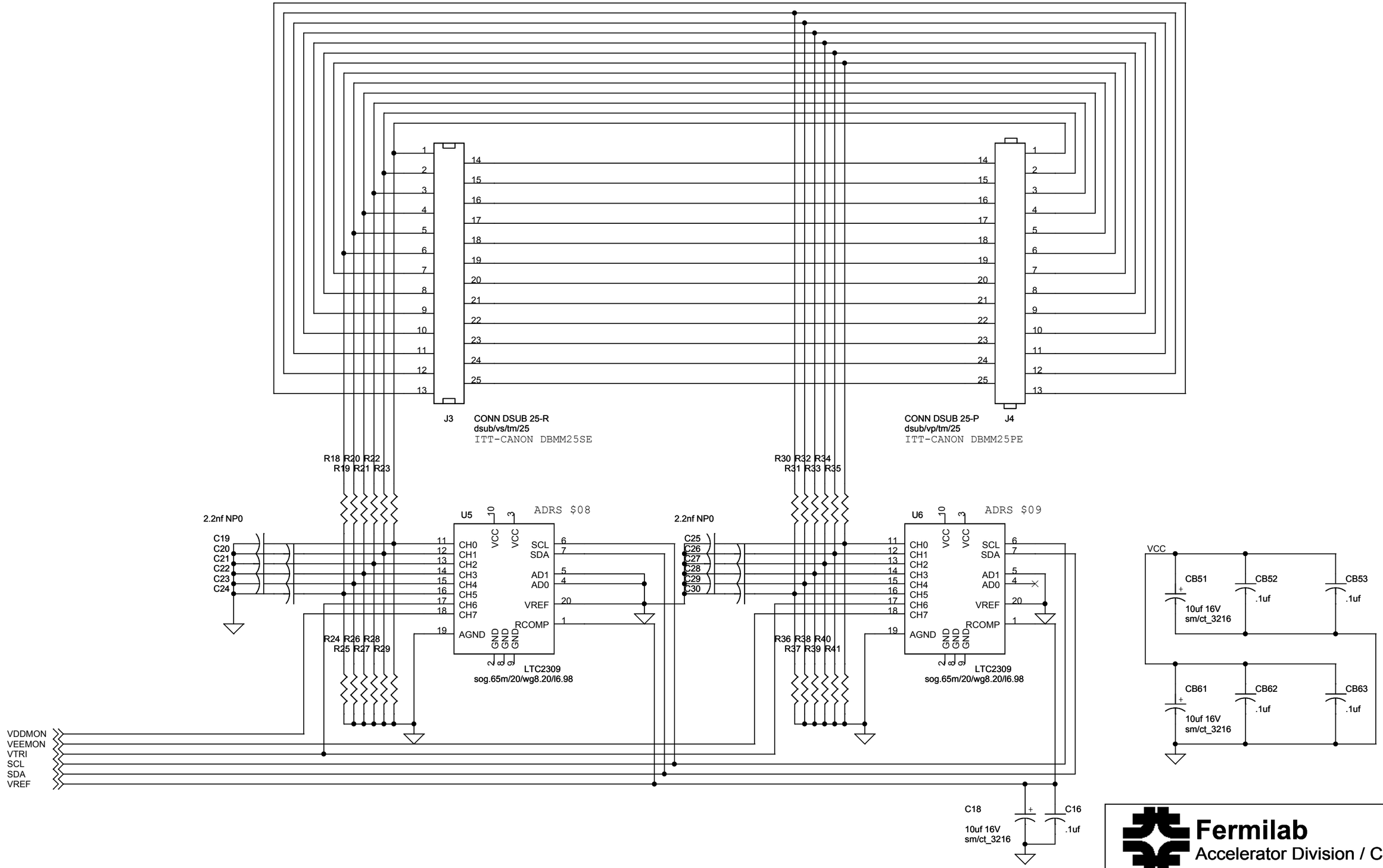

Fermilab
Accelerator Division / Controls Group

Title: Pelletron Light Link Diagnostic - P1			
Size: B	Document Number: <Doc>	Originator: P. Kasley	Rev: O
Date: Wednesday, December 01, 2010		Sheet 3 of 6	

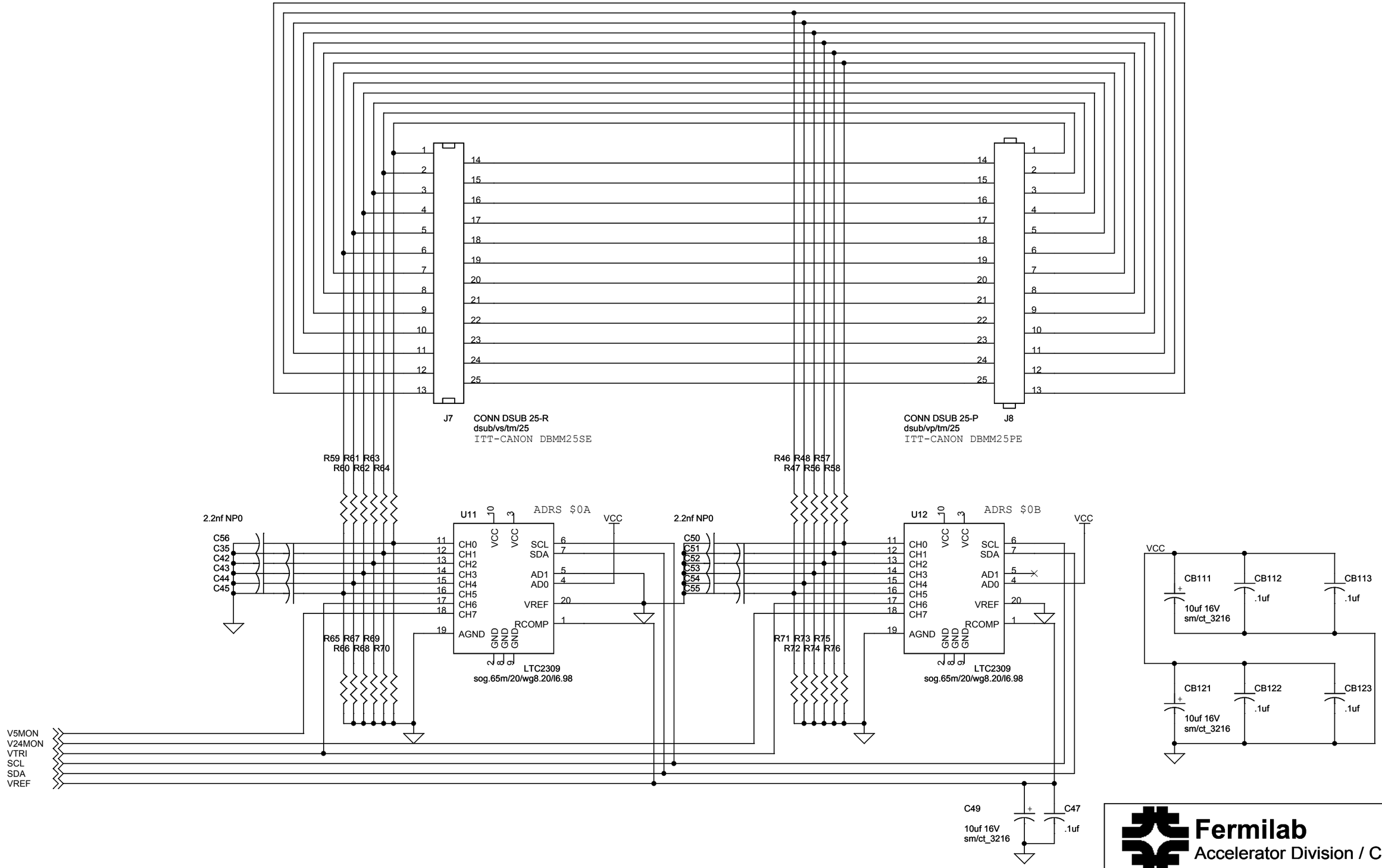

Fermilab
Accelerator Division / Controls Group

Title	Pelletron Light Link Diagnostic - P2		
Size B	Document Number <Doc>	Originator P. Kasley	Rev O
Date: Wednesday, December 01, 2010		Sheet 4 of 6	

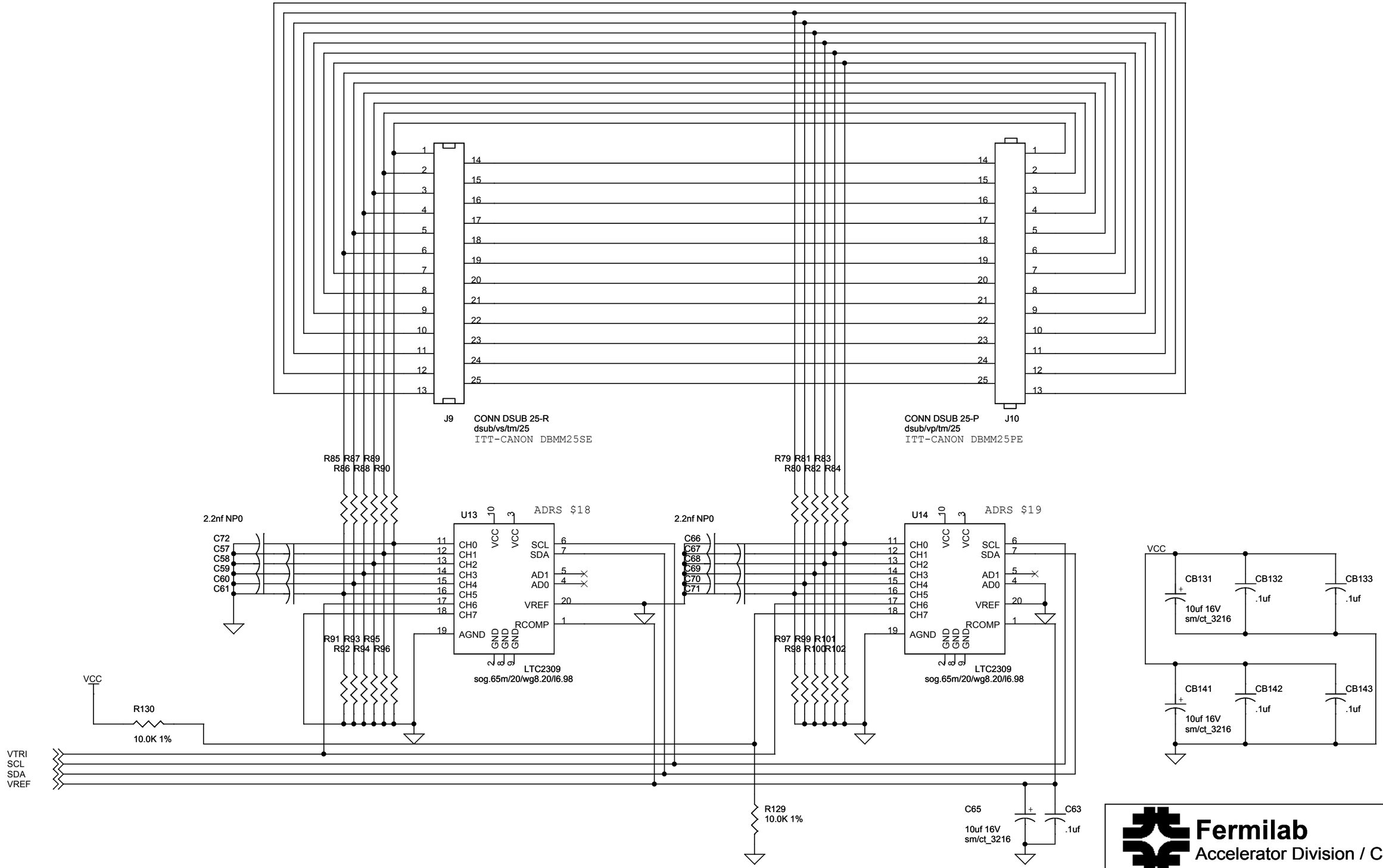

Fermilab
Accelerator Division / Controls Group

Title	Pelletron Light Link Diagnostic - P3		
Size B	Document Number <Doc>	Originator P. Kasley	Rev O
Date: Wednesday, December 01, 2010		Sheet 5 of 6	

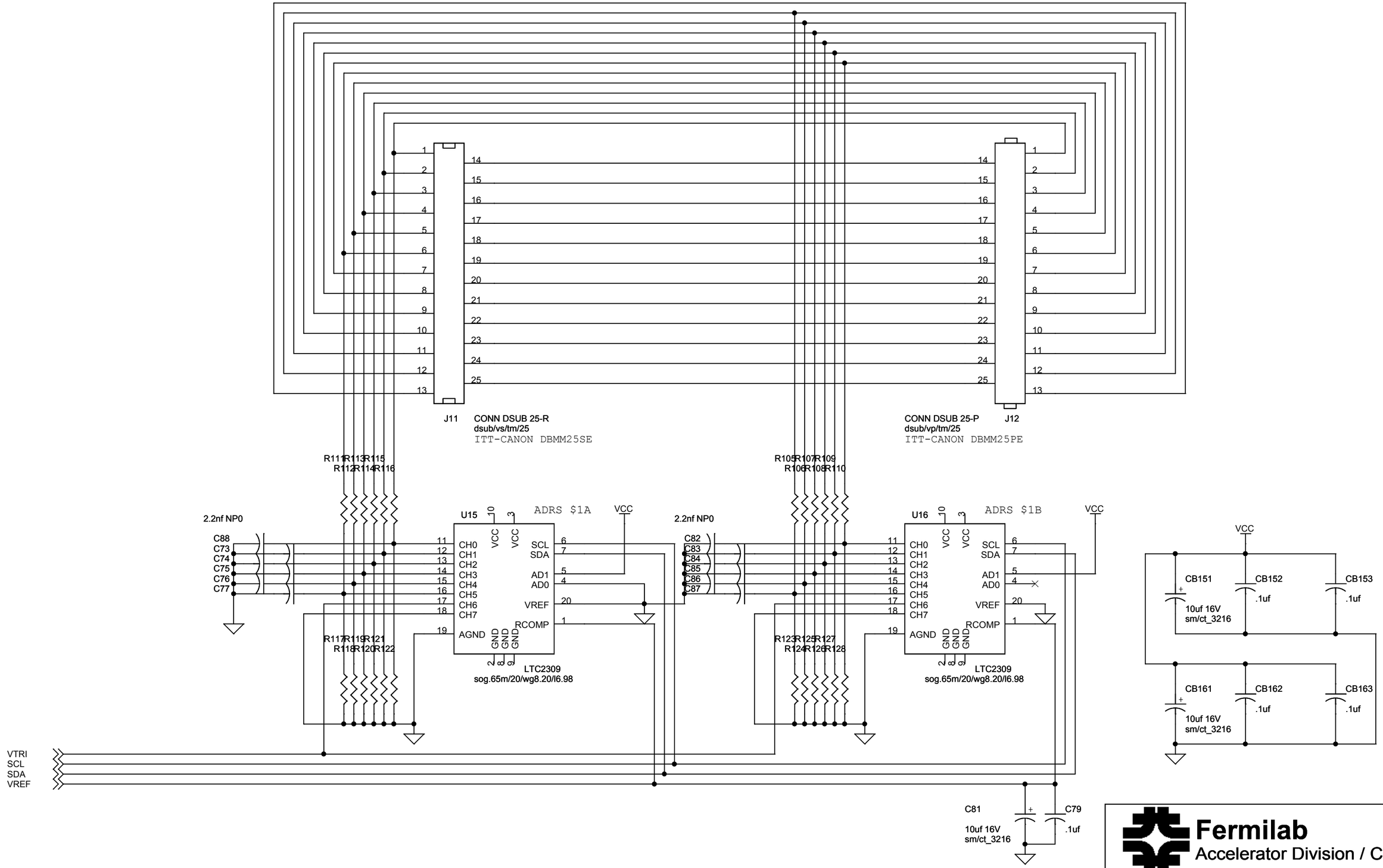

Fermilab
Accelerator Division / Controls Group

Title			
Pelletron Light Link Diagnostic - P4			
Size: B	Document Number: <Doc>	Originator: P. Kasley	Rev: O
Date: Wednesday, December 01, 2010		Sheet 6 of 6	

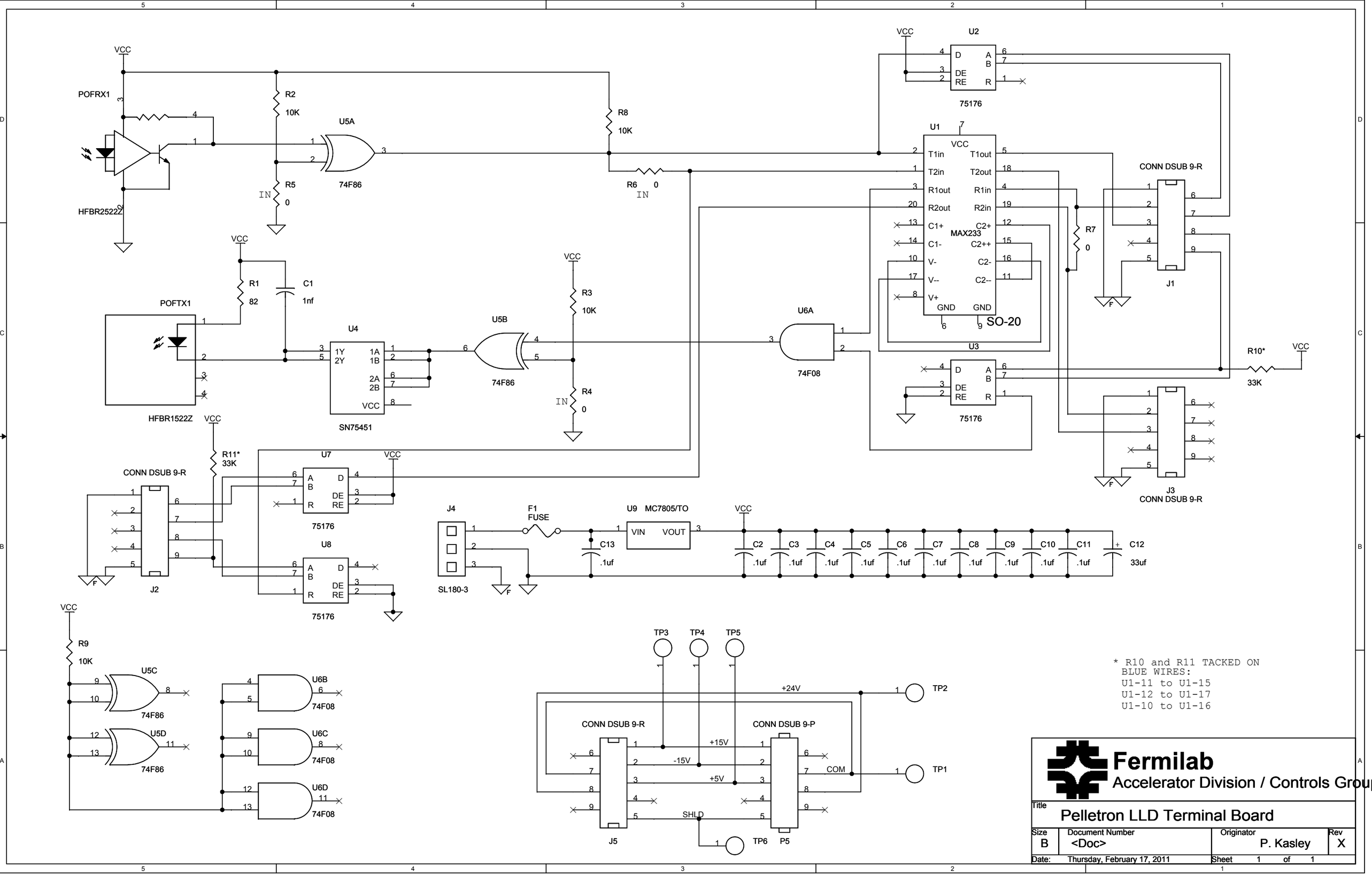
VCC
POFRX1
HFBR2522Z
R2
10K
U5A
74F86
R5
IN
0
R8
10K
R6
0
IN
U2
75176
U1
MAX233
SO-20
U3
CONN DSUB 9-R
J1
R7
0
R10*
33K
POFTX1
HFBR1522Z
R1
82
C1
1nf
U4
SN75451
U5B
74F86
R3
10K
R4
IN
0
U6A
74F08
R11*
33K
CONN DSUB 9-R
J2
U7
75176
U8
75176
J3
CONN DSUB 9-R
J4
SL180-3
F1
FUSE
C13
.1uf
U9 MC7805/TO
VIN
VOUT
C2
C3
C4
C5
C6
C7
C8
C9
C10
C11
.1uf
C12
33uf
R9
10K
U5C
74F86
U5D
74F86
U6B
74F08
U6C
74F08
U6D
74F08
TP3
TP4
TP5
TP2
TP1
TP6
+24V
+15V
-15V
+5V
COM
SHLD
CONN DSUB 9-R
J5
CONN DSUB 9-P
P5
* R10 and R11 TACKED ON
BLUE WIRES:
U1-11 to U1-15
U1-12 to U1-17
U1-10 to U1-16
Fermilab
Accelerator Division / Controls Group
Title
Pelletron LLD Terminal Board
Size
B
Document Number
<Doc>
Originator
P. Kasley
Rev
X
Date:
Thursday, February 17, 2011
Sheet
1
of
1